Barmesa Pumps

Installation, Operation & Maintenance Manual

Submersible Stainless Vortex Sewage Pump

BSV series

0.5-10 HP

@ 3450 RPM

barmesapumps

IMPORTANT! - Read all instructions in this manual before operating or servicing a pump.

Last update: JAN/12/2026

Before installation, read the following instructions carefully. Failure to follow instruction and safety information could cause serious bodily injury, death and/or property damage. Each Barmesa product is carefully inspected to insure proper performance. Closely following these instructions will eliminate potential operating problems, assuring years of trouble-free service.

⚠ DANGER **Indicates an imminently hazardous situation which, if not avoided, WILL result in death or serious injury.**

⚠ WARNING **Indicates an imminenty hazardous situation which, if not avoided, MAY result in death or serious injury.**

⚠ CAUTION **Indicates a potentially hazardous situation which, if not avoided, MAY result in minor or moderate injury.**

IMPORTANT! - Barmesa Pumps is not responsible for losses, injury or death resulting from failure to observe these safety precautions, misuse, abuse or misapplication of pumps or equipment.

ALL RETURNED PRODUCTS MUST BE CLEANED, SANITIZED, OR DECONTAMINATED PRIOR TO SHIPMENT, TO INSURE EMPLOYEES WILL NOT BE EXPOSED TO HEALTH HAZARDS IN HANDLING SAID MATERIAL. ALL APPLICABLE LAWS AND REGULATIONS SHALL APPLY.

⚠ WARNING Installation, wiring, and junction connections must be in accordance with the National Electric Code and all applicable state and local codes. Requirements may vary depending on usage and location.

⚠ WARNING Installation and servicing is to be conducted by qualified personnel only.

Keep clear of suction and discharge openings. Do not insert fingers in pump with power connected; the rotating cutter and/or impeller can cause serious injuty.

Always wear eye protection when working on pumps. Do not wear loose clothing that may become entangled in moving parts.

⚠ DANGER

Pumps build up heat and pressure during operation. Allow time for pumps to cool before handling or servicing the pump or any accessory items associated with or near the pump.

⚠ DANGER

This pump is not intended for use in swimming pools or water installations where there is human contact with pumped fluid.

⚠ DANGER

Risk of electric shock. To reduce risk of electric shock, always disconnect pump from power source before handling any aspect of the pumping system. ***Lock out power & tag.***

⚠ WARNING **Do not** use these pumps in water over 104 °F. **Do not** exceed manufactures recommended maximum performance, as this could cause the motor to overheat.

⚠ DANGER

Do not lift, carry or hang pump by the electrical cables. Damage to the electrical cables can cause shock, burns or death. **Never** handle connected power cords with wet hands. Use appropriate lifting device.

⚠ WARNING Ground Fault Circuit Interrupter (GFCI) to be used with plug-in type power cord.

⚠ DANGER

Failure to permanently ground the pump, motor and controls before connecting to power can cause shock, burns or death.

⚠ DANGER

These pumps are not to be installed in locations classified as hazardous in accordance with the National Electric Code, ANSI/NFPA 70.

⚠ WARNING The Uniform Plumbing Code (UPC) states that sewage systems shall have an audio and visual alarm that signals a malfunction of the systems, that are required to reduce the potencial for property damage.

IMPORTANT! - Prior to installation, record Model Number, Serial, Amps, Voltage, Phase and HP from pump name plate for the future reference. Also record the Voltage and Current Readings at Startup:

Model Number:_____

Serial:_____

Amps:_____ Volts:_____

Phase:_____ HP:_____

barmesapumps

DISCHARGE:	2", 3" & 4" NPT elbow, vertical.
SPHERICAL SLD HNDLG:	1.35" (35 mm) for 2" discharge and 1.75" (45 mm) for 3" & 4" discharge
LIQUID TEMPERATURE:	104 °F (40 °C) max.
VOLUTE:	316 series stainless steel
MOTOR HOUSING:	316 series stainless steel
SEAL PLATE:	316 series stainless steel
IMPELLER:	8 vane, semi-open *Vortex*. 316 series stainless steel.
SHAFT:	316 series stainless steel
HARDWARE:	316 series stainless steel
GASKET:	Buna-N & Viton®
PAINT:	Air dry enamel, water based.
SEAL:	Double mechanical, oil lubricated. Upper part of carbon-ceramic, lower part of silicone carbide. Viton® elastomer and stainless steel spring.
CORD ENTRY:	33 ft (0.5-7.5 HP) & 40 ft (10 HP) of neoprene cord
BEARINGS:	Ball, single row, permanently oil lubricated for 60,000 hours of work. Designed for radial and axial loads.
MOTOR:	1 & 3 phase, 115, 230 & 460 volts, 60 Hz, 3450 RPM. For continuous duty, with protector IP68 in winding, insulation class B. Built-in capacitor for single phase motors.
HANDLE/ LIFTING BAIL:	Nylon and/or 316 stainless steel
HANDLE/ MAX. SUBMERGENCE:	32.8 ft (10 meters)

hermesapumps

0.5 - 1 HP

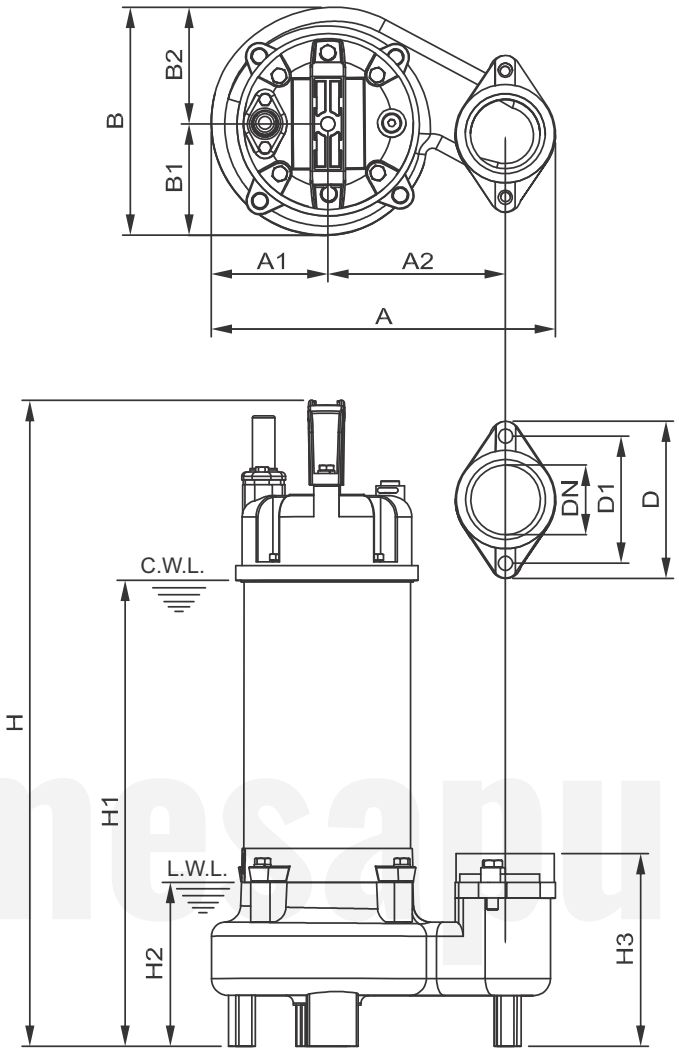

MODEL	HP	V	PH	MAX. AMPS	DISCHARGE DIAM.	DISCHARGE MAX. (m)	MAX. FLOW (GPM)	CORD (ft)	SPH SLD HNDLG
2BSV051DS	0.5	115	1	8	2"	11	88	33	1.35"
2BSV054DS	0.5	460	3	1.4	2"	11	88	33	1.35"
2BSV101DS	1	115	1	12	2"	14	118	33	1.35"
2BSV102DS	1	230	1	6	2"	14	118	33	1.35"
2BSV103DS	1	230	3	4	2"	14	118	33	1.35"
2BSV104DS	1	460	3	2	2"	14	118	33	1.35"

- Built-in capacitor for single phase motors.
- Three-phase pump, VFD compatible. Reliable operation within 30 ~ 60 Hz.

MODEL	A	A1	A2	B	B1	B2	D	D1	DN	H	H1	H2	H3	WT 1PH	WT 3PH
2BSV-051DS	9	3	4.7	5.9	2.8	3.2	4.3	3.5	2	16.7	11.7	4.6	5.4	28.6	28.6
2BSV-054DS															27.3
2BSV-101DS	9	3	4.7	5.9	2.8	3.2	4.3	3.5	2	17.9	12.9	4.6	5.4	33.9	33.9
2BSV-102DS															
2BSV-103DS															34.5
2BSV-104DS															

- Dimensions in inches.

* WT = Weight in pounds, without cable.

barnesapumps

2 - 3 HP

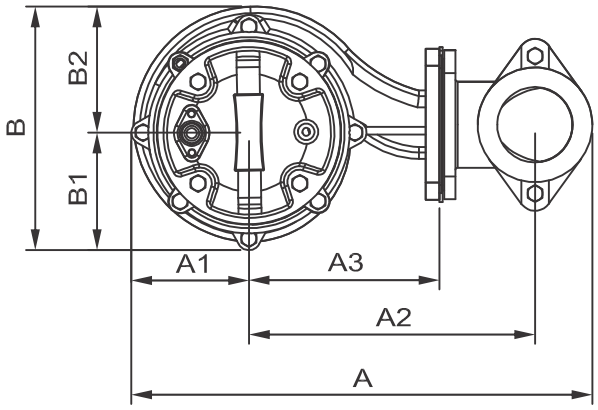

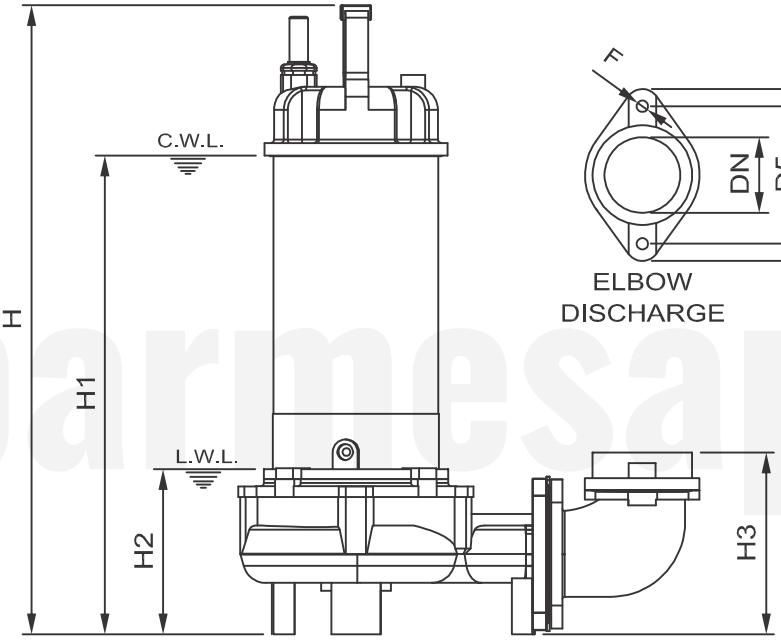

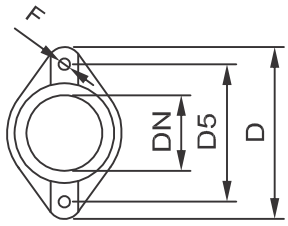

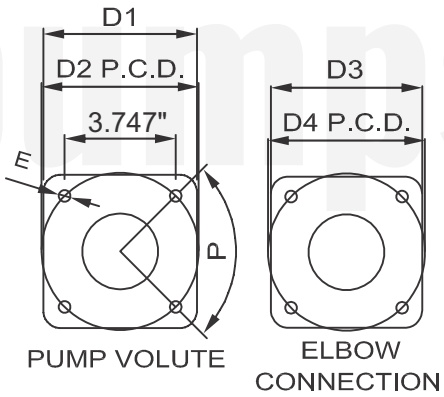

MODEL	HP	V	PH	MAX. AMPS	DISCHARGE DIAM.	DISCHARGE MAX. (m)	MAX. FLOW (GPM)	CORD (ft)	SPH SLD HNDLG
2BSV202DS	2	230	1	11	2"	20	155.8	33	1.75"
2BSV203DS	2	230	3	7	2"	20	155.8	33	1.75"
2BSV204DS	2	460	3	3.5	2"	20	155.8	33	1.75"
2BSV303DS	3	230	3	8	2"	23	177	33	1.75"
2BSV304DS	3	460	3	4.5	2"	23	177	33	1.75"

- Built-in capacitor for single phase motor.
- Three-phase pump, VFD compatible. Reliable operation within 30 ~ 60 Hz.

MODEL	A	A1	A2	A3	B	B1	B2	D	D1	D2	D3	D4	D5	DN	E	F	P	H	H1	H2	H3	WT
2BSV-202DS	15.4	4.1	9.3	6.1	8.2	4.1	4.1	5.9	5.2	5.3	5.1	5.3	4.7	2	0.4	0.4	90°	20.9	15.8	5.9	6	65.5
2BSV-203DS																						
2BSV-204DS																						
2BSV-303DS	15.4	4.1	9.3	6.1	8.2	4.1	4.1	5.9	5.2	5.3	5.1	5.3	4.7	2	0.4	0.4	90°	21.7	16.5	5.9	6	69
2BSV-304DS																						

- Dimensions in inches.

* WT = Weight in pounds, without cable.

barmesapumps

5 - 7.5 HP

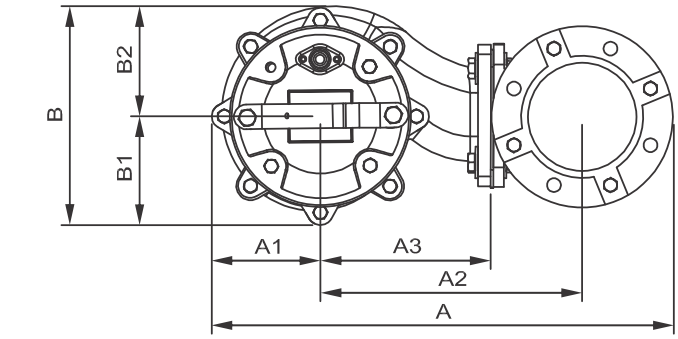

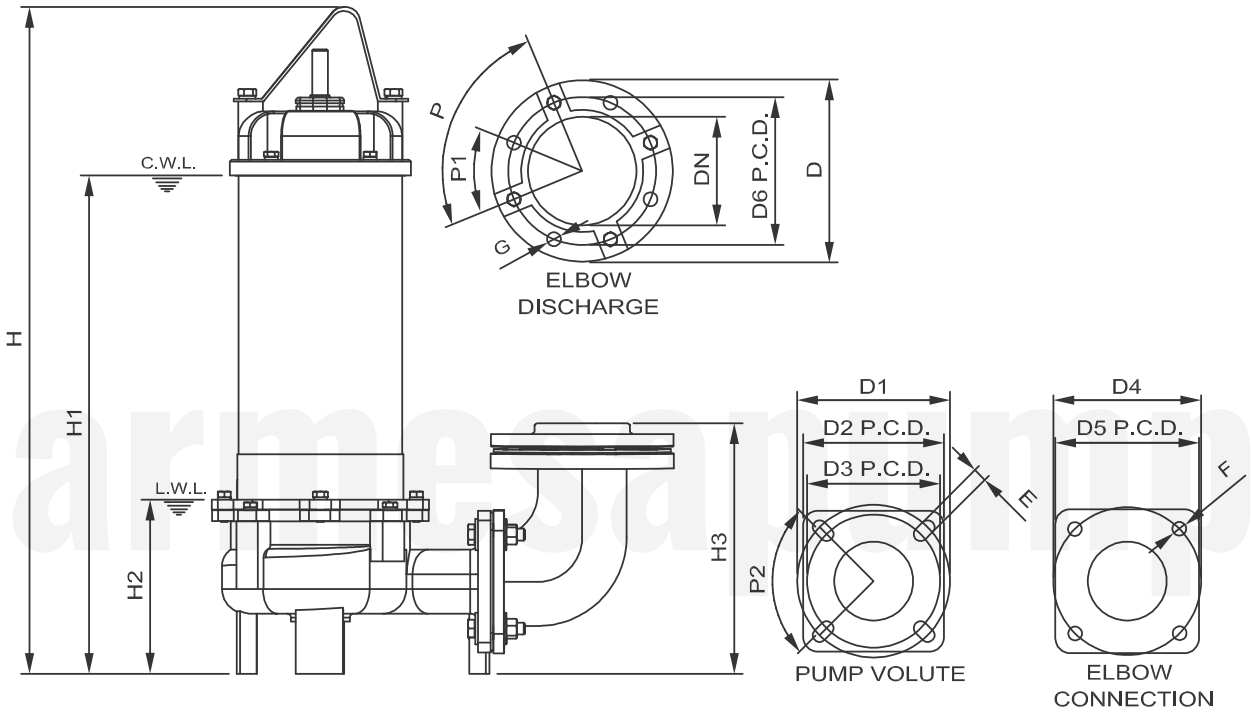

MODEL	HP	V	PH	MAX. AMPS	DISCHARGE DIAM.	DISCHARGE MAX. (m)	MAX. FLOW (GPM)	CORD (ft)	SPH SLD HNDLG
3BSV503DS	5	230	3	15	3"	27	275	33	1.75"
3BSV504DS	5	460	3	8	3"	27	275	33	1.75"
3BSV753DS	7.5	230	3	21	3"	32	290.5	33	1.75"
3BSV754DS	7.5	460	3	10.5	3"	32	290.5	33	1.75"

- Three-phase pump, VFD compatible. Reliable operation within 30 ~ 60 Hz.

MODEL	A	A1	A2	A3	B	B1	B2	D	D1	D2	D3	D4	D5
3BSV-503DS	18.4	3.9	10.8	7	8.3	3.7	4.5	7.2	5.6	6.1	5.3	5.5	5.9
3BSV-504DS													
3BSV-753DS	18.4	3.9	10.8	7	8.3	3.7	4.5	7.2	5.6	6.1	5.3	5.5	5.9
3BSV-754DS													

MODEL	D6	DN	E	F	G	P	P1	P2	H	H1	H2	H3	WT
3BSV-503DS	5.9	3	0.6	0.6	0.6	90°	45°	90°	24.9	18.4	6.3	8.9	105.8
3BSV-504DS													
3BSV-753DS	5.9	3	0.6	0.6	0.6	90°	45°	90°	26.5	20	6.3	8.9	118.6
3BSV-754DS													

- Dimensions in inches.

* WT = Weight in pounds, without cable.

barnesamps

10 HP

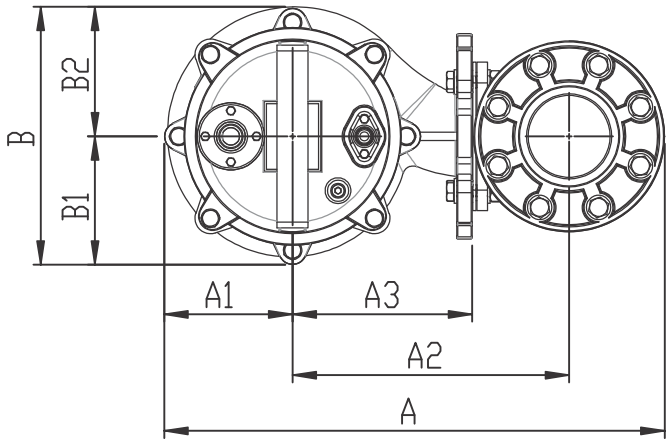

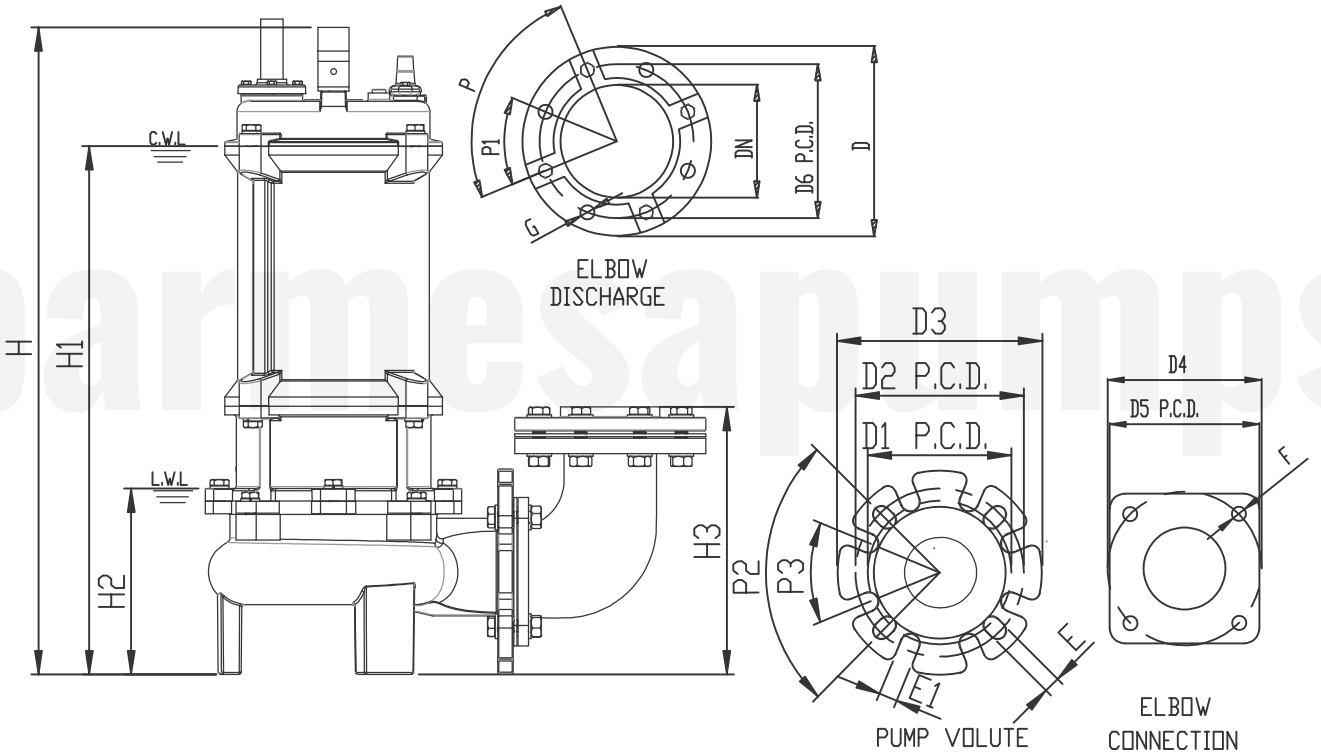

barmesapumps

MODEL	HP	V	PH	MAX. AMPS	DISCHARGE ELBOW Ø	DISCHARGE MAX. (ft)	MAX. FLOW (GPM)	CORD (ft)	SPH SLD HNDLG
4BSV1003DS	10	230	3	28	4"	128	300	47	1.75"
4BSV1004DS	10	460	3	14	4"	128	300	47	1.75"

- Three-phase pump, VFD compatible. Reliable operation within 30 ~ 60 Hz.

A	A1	A2	A3	B	B1	B2	D	D1	D2	D3	D4	D5	D6
19.2	4.9	10.6	6.9	9.9	4.9	5	7.2	5.5	6.5	7.9	5.5	5.9	5.9

DN	E	E1	F	G	P	P1	P2	P3	H	H1	H2	H3	WT
4	0.6	0.7	0.6	0.6	90°	45°	90°	45°	24.8	20.3	7.1	10.3	156.5

- Dimensions in inches.

* WT = Weight in pounds, without cable.

10 HP with Slide Rail Coupling

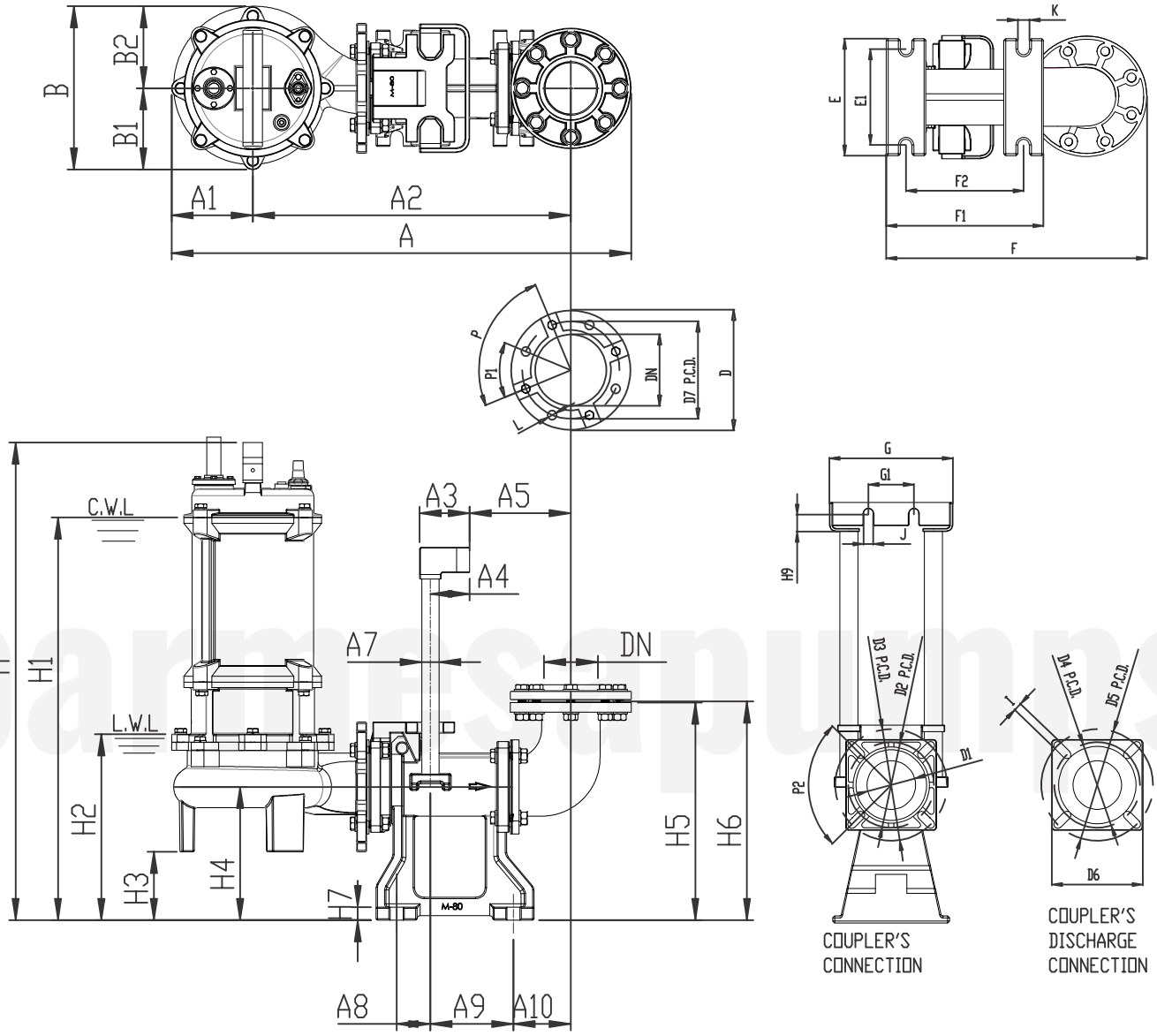

A	A1	A2	A3	A4	A5	A6	A7	A8	A9	A10	B	B1	B2	D	D1
27.8	4.9	19.2	3.1	2.5	5.7	8.1	1	2.8	4.3	3.5	9.9	4.9	5	7.2	2.9

D2	D3	D4	D5	D6	D7	DN	P	P1	P2	E	E1	F	F1	F2	G
5.3	6.8	5.3	6.8	5.5	5.9	3.9	90°	45°	90°	7.1	5.9	15.9	9.5	7.1	7.5

G1	H	H1	H2	H3	H4	H5	H6	H7	H8	H9	I	J	K	L	WT	WT1
2.8	29	24.4	11.3	4.1	8.1	12.4	12.5	0.4	8.7	1	0.6	0.6	0.7	0.6	156.5	30.6

- Dimensions in inches.

* WT = Weight in pounds, without cable.

* WT1 = Slide Rail Coupling weight.

barnespumps

Receiving inspection

Upon receiving the pump, it should be inspected for damage or shortages. If damage has occurred, file a claim immediately with the company that delivered the pump. If the manual is removed from the packaging, do not lose or misplace.

Storage

Any product that is stored for a period longer than six (6) months from the date of purchase should be bench tested prior to installation. A bench test consists of, checking the impeller to assure it is free turning and a run test to assure the motor (and switch if provided) operate properly.

Before Installation

Insulation resistance measurement

With the motor and cable (excluding the power supply cable) immersed in water, use a megger to measure the insulation resistance between ground and each phase of the motor, and again between each phase of the motor. The megger should indicate an insulation resistance of not less than 20 mega ohms. While making the measurement, keep the power supply cable off the ground. **We recommend that an auxiliary pump be kept on hand in case of emergency.**

Installation

⚠ **WARNING** Under no circumstances should cable be pulled while the pump is being transported or installed. Attach a chain or rope to the grip and install the pump.

1. This pump must not be installed on its side or operated in a dry condition. Ensure that it is installed upright on a secure base.
2. Install the pump at a location in the tank where there is the least turbulence.
3. If there is a flow of liquid inside the tank, support the piping where appropriate. Install piping so that air will not be entrapped. If piping must be installed in such a way that air pockets are unavoidable, install an air release valve wherever such air pockets are most likely to develop.
4. Do not permit end of discharge piping to be submerged, as backflow will result when the pump is shut down.

⚠ **WARNING** Non-automatic pumps do not have an automatic operating system. Do not operate the pump for a long time with the water level near the lowest water level (H1) as shown in Figure 1, as the automatic cut-off switch incorporated inside the motor will be activated.

5. To avoid dry operation, install the floats as shown in Figure 2. The pump may not start if a floats switch touches the wall of the water tank or the piping. Install the floats so that this will not happen.

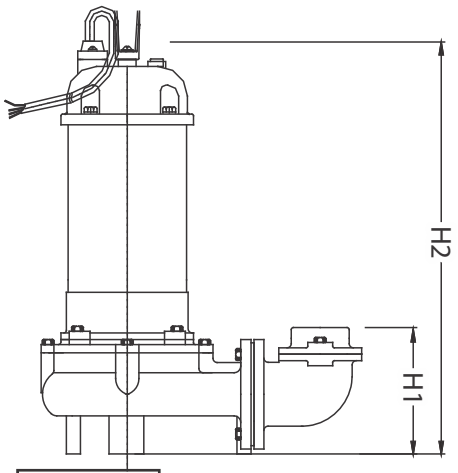

Figure 1

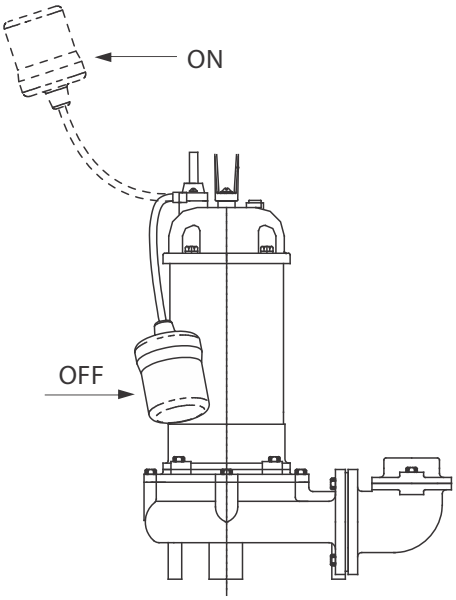

Figure 2

Wiring:

a) Wire as indicated for the appropiate start system as shown in figure 3.
b) Loose connections will stop the pump. Make sure all electrical connections are secure.

Cable:

⚠ **WARNING** c) Never let the end of the cable contact water.
d) If the cable is extended, do not immerse the splice in water.
e) Fasten the cable to the discharge piping with tape or vinyl strips.
f) Install the cable so that it will not overheat. Overheating caused by coiling the cable and exposing it to direct sunlight.

Grounding:

Connect the green wire to ground. Under no circumstances should the green wire be connected to the power supply.

⚠ **DANGER** Use short circuit breakers to prevent danger of electrical shock.

barmesapumps

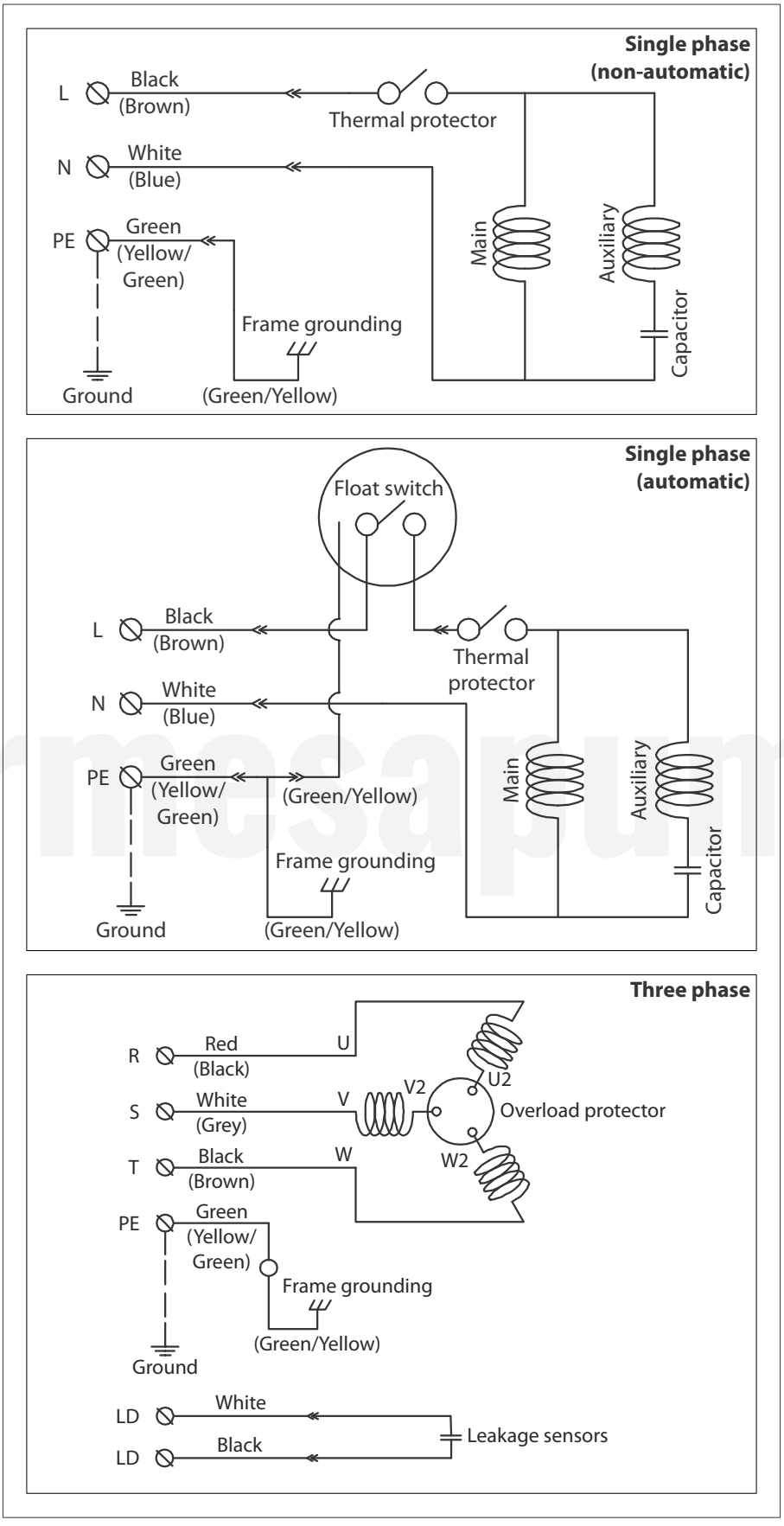

Figure 3

barnesapumps

▸ Before Starting the Pump

1) After completing installation, measure the insulation resistance again as described in Installation.
2) Check water level. If the pump is operated continuously for an extended period of time in a dry condition or at the lowest water level, the motor protector will be activated. Constant repetition of this action will shorten pump service life. Do not start the pump again in such a situation until after the motor has completely cooled.

▸ Test operation

Automatic and non-automatic pump:

1) Turn the operating switch on and off a couple of times to check for normal pump start.
   Floating switch must be raised for the pump to start.
2) Next, check direction and rotation. If discharge volume is low or unusual sounds are heard when the pump is operating, rotation has been reversed. When this happens, reverse two of the wires.

▸ Maintenance

Check pressure, output, voltage, current and other specifications. Unusual readings may indicate. Refer to Troubleshooting and correct as soon as possible.

Daily inspections:

1) Check current and ammeter fluctuation daily. If ammeter fluctuation is great, even though within the limits of pump rating, foreign matter may be clogging the pump. If the quantity of liquid discharged falls suddenly, foreign matter may be blocking the suction inlet.

Monthly inspections:
Measure the insulation resistance. The value should be more than 1M ohm. If resistance starts to fall rapidly even with an initial indication of over 1M ohm, this may be an indication of trouble and repair work is required.

Annual inspections:
To extend the service life of the mechanical seal, replace the oil in the mechanical seal chamber once a year. Water mixed with the oil or cloudy textures are indications of a defective mechanical seal requiring replacement. When replacing the oil, lay the pump on its side with filler plug on top. Inject suitable amount turbine oil no. 32 (ISO VG-32).

Inspections at 3-5 year intervals:
Conduct an overhaul of the pump. These intervals will preclude the possibility of future trouble.

Parts that will need to be replaced:
Replace the appropriate part when the following conditions are apparent. See figure 4. (Note: replacement schedule is based on normal operating conditions)

▸ Disassembly

When disassembling pump, have a piece of cardboard or wooden board ready to place the different parts on as you work. Do not pile parts on top of each other. They should be laid out neatly in rows. The o-ring and gasket cannot be used again once they are removed. Have replacement parts ready. Disassemble in the following order, referring to the sectional view.

⚠ WARNING Be sure to cut off power source before disassembly.

1. Remove pump casing bolts, raise the motor section and remove pump casing.

2. Remove shaft head bolt and impeller.

3. Remove oil filler plug and drain lubricating oil.

4. Remove intermediate casing bolts and intermediate oil chamber. (Remember that any lubricating oil remaining in the mechanical seal chamber will flow out.)

5. Carefully remove mechanical seal, taking care not to scratch sliding surface or motor shaft.

▸ Assembly

Re-assemble in reverse order of disassembly. Be careful of the following points:

6. During re-assembly, rotate the impeller by hand and check for smooth rotation. If rotation is not smooth, perform steps (3) through (5) again.

7. Upon completion of re-assembly step 1 rotate the impeller by hand from the suction the suction inlet and check that it rotates smoothly without touching the suction cover before operating the pump.

Please obtain o-rings, packing, shaft seals and other parts from pump dealer.

Figure 4

REPLACEABLE PART	Mechanical seal	Oil filler plug gasket	Lubricating oil	O-ring
REPLACEAMENT GUIDE	Whenever oil in mechanical seal chamber is clouded	Whenever oil is replaced or inspected	Whenever clouded or dirty	Whenever pump is overhauled
FREQUENCY	Annually	Every 6 months	Every 6 months	Annually

homeseapumps

0.5-1 HP

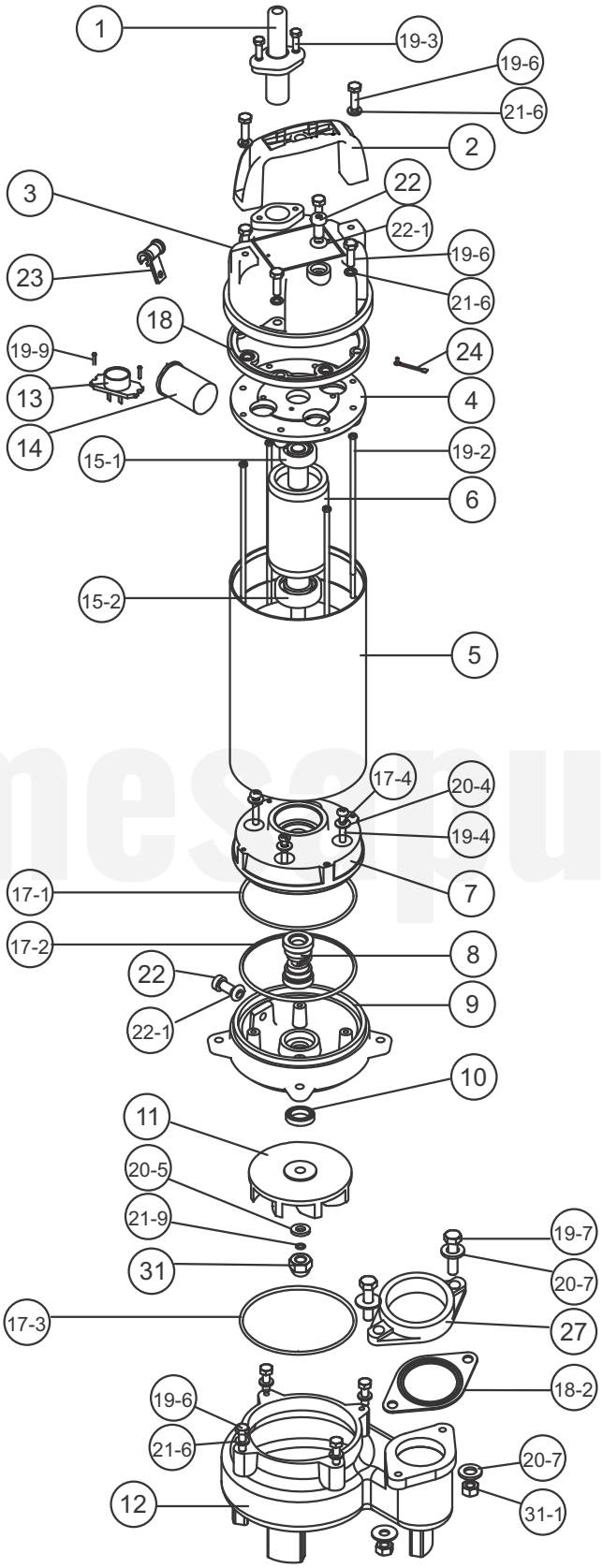

barmespumps

For repair part please supply: Model Number and Serial as shown on Name Plate, and Part Description and Part Number as shown on Parts List.

ITEM	NAME	MATERIAL	PHOTO	ITEM	NAME	MATERIAL	PHOTO
2	HANDLE	NYLON 6		12	PUMP CASING	SUS 316	
3	MOTOR COVER	SUS 316		13	PROTECTOR (3 PHASE)		
4	BRACKET	EN-GJL-200		14	CAPACITOR (1 PHASE)		
6	SHAFT WITH ROTOR	SUS 316		15-1 15-2	BEARINGS		
7	OIL CHAMBER	EN-GJL-200		17-1 17-2	O-RINGS	VITON	
8	MECHANICAL SEAL	CA/CE SIC/SIC		17-3	VOLUTE O-RING	VITON	
9	SEAL HOUSING	SUS 316		18	MOTOR GASKET	VITON	
10	OIL SEAL	VITON		18-2	FLANGE GASKET	VITON	
11	IMPELLER	SUS 316		27	FLANGE	SUS 316	

ITEM	NAME	MATERIAL
1	CABLE	SJTOW-STOW
5	STATOR WITH MOTOR HOUSING	SUS 316
17-4	O-RING OF OIL CHAMBER	NBR
19-2	LONG SCREW OF MOTOR	STEEL
19-3	SCREW OF CABLE GLAND	SUS 316
19-4	SCREW	STEEL
19-6	SCREW	SUS 316
19-7	SCREW OF FLANGE	SUS 316
19-9	SCREW OF PROTECTOR	STEEL
20-4	WASHER	STEEL

ITEM	NAME	MATERIAL
20-5	WASHER OF IMPELLER	SUS 316
20-7	WASHER	SUS 316
21-6	SPRING WASHER	SUS 316
21-9	SPRING WASHSER OF IMPELLER	SUS 316
22	OIL FILLER PLUG	SUS 316
22-1	O-RING OF OIL FILLER PLUG	VITON
23	CABLE SEAT	NBT/AISI 304
24	WIRE AND SCREW	STEEL
31	NUT OF IMPELLER	SUS 316
31-1	NUT OF FLANGE	SUS 316

For repair part please supply: Model Number and Serial as shown on Name Plate, and Part Description and Part Number as shown on Parts List.

barnesapumps

2-3 HP

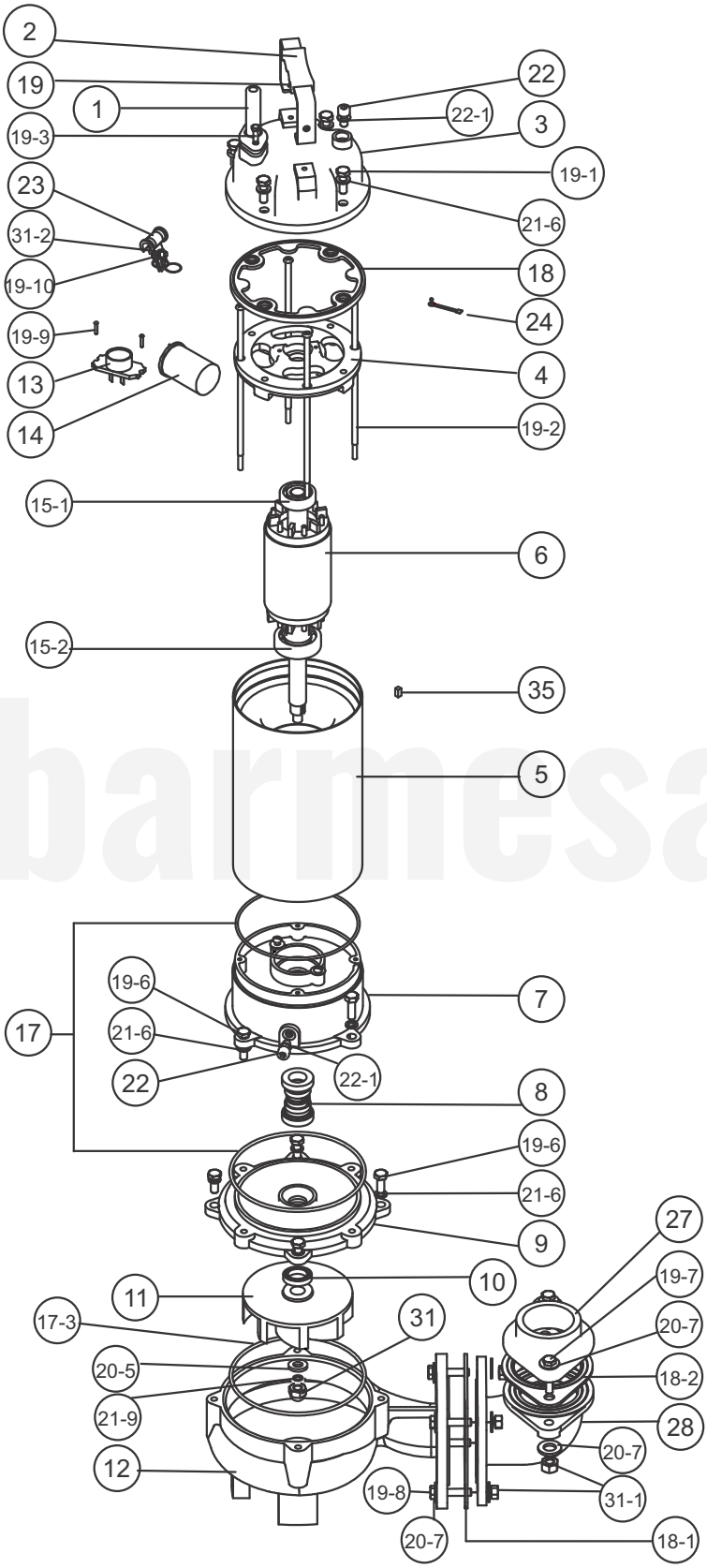

5-7.5 HP

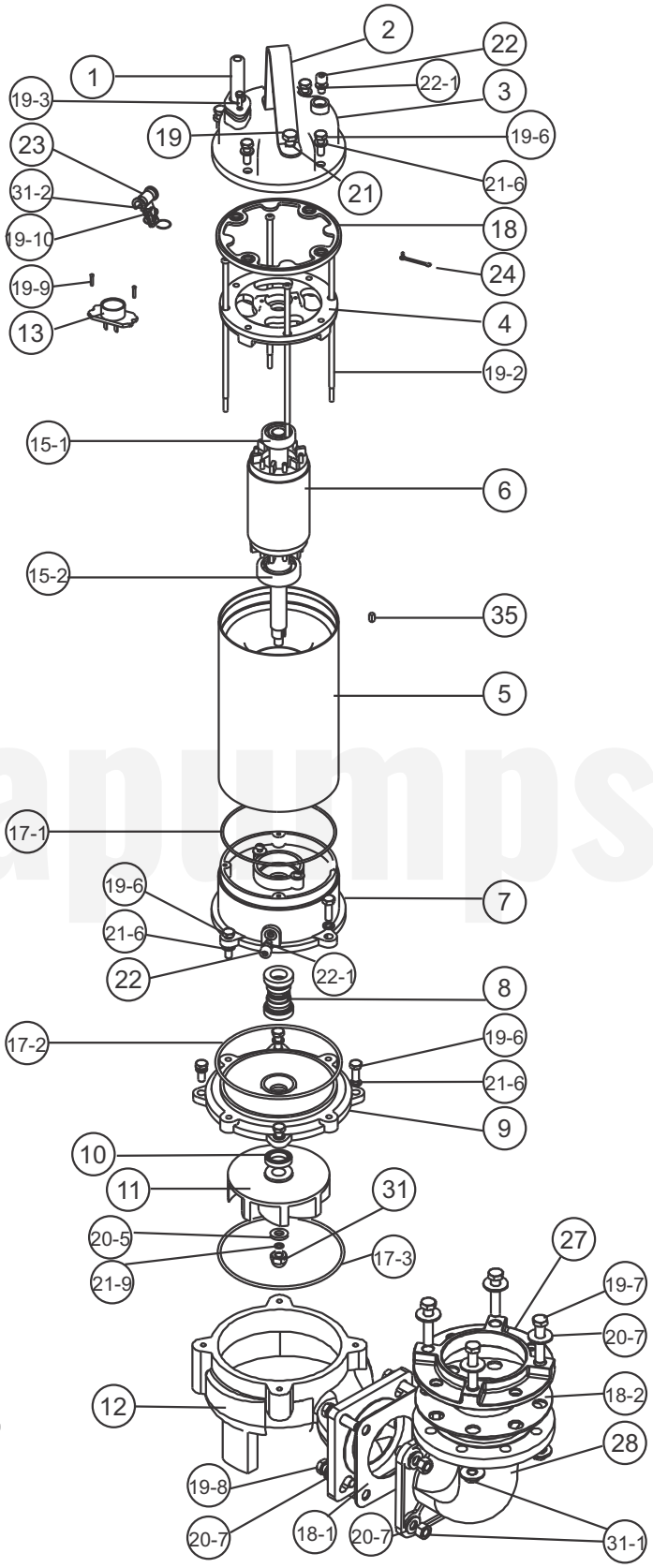

barnesapumps

For repair part please supply: Model Number and Serial as shown on Name Plate, and Part Description and Part Number as shown on Parts List.

ITEM	NAME	MATERIAL	PHOTO	ITEM	NAME	MATERIAL	PHOTO
2	HANDLE (2-3 HP)	SUS 316		12	PUMP CASING	SUS 316	
2	LIFTING BAIL (5-7 HP)	SUS 316		13	PROTECTOR (3 PHASE)		
3	MOTOR COVER	SUS 316		18	MOTOR GASKET	VITON	
4	BRACKET	EN-GJL-200		18-1	ELBOW GASKET	VITON	
6	SHAFT WITH ROTOR	SUS 316		18-2	FLANGE GASKET (2-3 HP)	VITON	
7	OIL CHAMBER	SUS 316		18-2	FLANGE GASKET (5-7.5 HP)	VITON	
8	MECHANICAL SEAL	CA/CE SIC/SIC		27	FLANGE (2-3 HP)	SUS 316	
9	SEAL HOUSING	SUS 316		27	FLANGE (5-7.5 HP)	SUS 316	
10	OIL SEAL	VITON		28	ELBOW (2-3 HP)	SUS 316	
11	IMPELLER	SUS 316		28	ELBOW (5-7.5 HP)	SUS 316	

ITEM	NAME	MATERIAL
1	CABLE	SJTOW-STOW
5	STATOR WITH MOTOR HOUSING	SUS 316
14	CAPACITOR (1 PHASE)	
15-1 15-2	BEARINGS	-
17-1 17-2	O-RINGS	VITON
17-3	O-RING OF VOLUTE	VITON
19	SCREW	SUS 316
19-1	SCREW OF TOP COVER	SUS 316
19-2	LONG SCREW OF MOTOR	STEEL
19-3	SCREW OF CABLE GLAND	SUS 316
19-6	SCREW	SUS 316
19-7	SCREW OF FLANGE	SUS 316
19-8	SCREW	SUS 316
19-9	SCREW OF PROTECTOR	STEEL

ITEM	NAME	MATERIAL
19-10	SCREW	SUS 316
20-5	WASHER OF IMPELLER	SUS 316
20-7	WASHER	SUS 316
21	SPRING WASHER OF HANDLE	SUS 316
21-6	SPRING WASHER	SUS 316
21-9	SPRING WASHER OF IMPELLER	SUS 316
22	OIL FILLER PLUG	SUS 316
22-1	O-RING OF OIL FILLER PLUG	VITON
23	CABLE SEAT	NBR/AISI 304
24	WIRE AND SCREW	STEEL
31	NUT OF IMPELLER	SUS 316
31-1	NUT OF FLANGE & ELBOW	SUS 316
31-2	NUT	SUS 316
35	KEY	SUS 316

Item 17-2 only for 5 - 7.5 HP models

For repair part please supply: Model Number and Serial as shown on Name Plate, and Part Description and Part Number as shown on Parts List.

barnesapumps

10 HP

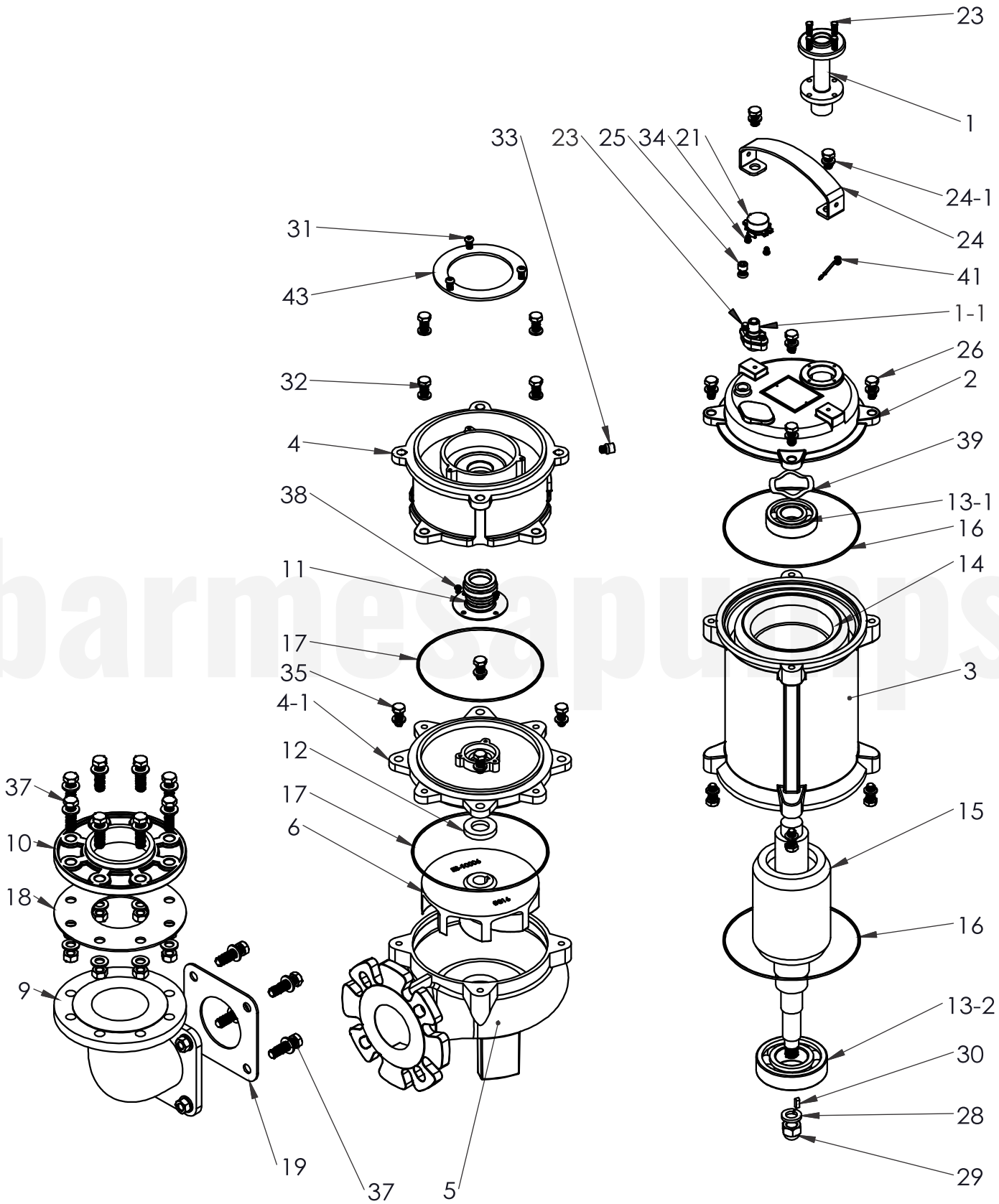

barmesapumps

For repair part please supply: Model Number and Serial as shown on Name Plate, and Part Description and Part Number as shown on Parts List.

10 HP

ITEM	NAME	MATERIAL
1	CABLE	STOW
1-1	LEAK DETECTOR CABLE	SJTOW
2	MOTOR COVER	AISI 316
3	MOTOR HOUSING	AISI 316
4	OIL CHAMBER	AISI 316
4-1	SEAL BRACKET	AISI 316
5	VOLUTE	AISI 316
6	IMPELLER	AISI 316
9	DISCHARGE ELBOW	AISI 316
10	FLANGE	AISI 316
11	MECHANICAL SEAL	SIC/SIC CA/CE
12	LIP SEAL	VITON
13-1	6306 BEARING	NTN/TPI
13-2	6309 BEARING	NTN/TPI
14	STATOR	-
15	ROTOR WITH SHAFT	AISI 316
16	O-RING	VITON
17	O-RING	VITON
18	FLANGE GASKET	VITON
19	ELBOW GASKET	VITON
21	OVERLOAD PROTECTOR	KLIXON
23	SCREW OF CABLE GLAND	AISI 316
24	HANDLE	AISI 316
24-1	HEX. BOLT / SPRING WASHER	AISI 316
25	SOCKET SCREW / O-RING	AISI 316 / VITON
26	HEX. BOLT / SPRING WASHER	AISI 316
28	SPRING WASHER	AISI 316
29	HEX. NUT	AISI 316
30	KEY	AISI 316
31	HEX. BOLT	SC
32	HEX. BOLT / SPRING WASHER	AISI 316
33	SOCKET SCREW / O-RING	AISI 316 / VITON
34	PHILLIPS SCREW	SC
35	HEX. BOLT / SPRING WASHER	AISI 316
37	HEX. BOLT / FLAT WASHER / HEX. NUT	AISI 316
38	TRUSS BOLT	SC
39	WAVE WASHER	SC
41	GROUND LEAD	-
43	BEARING HOLDER	SC

barnespumps

For repair part please supply: Model Number and Serial as shown on Name Plate, and Part Description and Part Number as shown on Parts List.

Risk of electric shock. Always disconnect the pump from the power source before handling inspections or repairs.

Symptom	Possible Cause(s)	Corrective Action
Does not start. Starts, but immediately stops.	(1) Power failure. (2) Large discrepancy between power source and voltage. (3) Significant drop in voltage. (4) Motor phase malfunction. (5) Electric circuit connection faulty. (6) Faulty connection of control circuit. (7) Fuses are blown. (8) Faulty magnetic switch. (9) Water is not at level indicated by float. (10) Float is not in appropriate level. (11) Float is not effective. (12) Short circuit breaker is functioning. (13) Foreign matter clogging pump. (14) Motor burned out. (15) Motor bearing broken.	(1)~(3) Contact electric power company and devise counter-measures. (4) Inspect electric circuit. (5) Correct wiring. (6) Inspect connections and magnetic coil. (7) Check circuit then replace fuse. (8) Replace with correct one. (9) Raise water level. (10) Adjust the position of float. (11) Repair or replace. (12) Repair location of short circuit. (13) Remove foreign matter. (14) Repair or replace. (15) Repair or replace.
Operates, but stops after a while.	(1) Prolonged dry operation has activated motor protector and caused pump to stop. (2) High liquid temperature has activated motor protector and caused pump to stop. (3) Reverse rotation.	(1) Raise water level to C.W.L. (2) Lower liquid temperature. (3) Correct rotation.
Does not pump. Inadequate volume.	(1) Reverse rotation. (2) Significant drop in voltage. (3) Operating a 60 Hz pump with 50 Hz. (4) Discharge head is high. (5) Large piping loss. (6) Low operating water level causes air suction. (7) Leaking from discharge piping. (8) Clogging of discharge piping. (9) Foreign matter in suction inlet. (10) Foreign matter clogging pump. (11) Worn impeller.	(1) Correct rotation (see Operation). (2) Contact electric power company. (3) Check nameplate. (4) Recalculate and adjust. (5) Recalculate and adjust. (6) Raise water level or lower pump. (7) Inspect, repair. (8) Remove foreign matter. (9) Remove foreign matter. (10) Remove foreign matter. (11) Replace impeller.
Overcurrent.	(1) Unbalanced current and voltage. (2) Significant voltage drop. (3) Motor phase malfunction. (4) Operating 50 Hz pump on 60 Hz. (5) Reverse rotation. (6) Low head. Excessive volume of water. (7) Foreign matter clogging pump. (8) Motor bearing is worn out or damaged.	(1) Contact electric power company. (2) Contact electric power company and devise counter-measure. (3) Inspect connections and magnetic switch. (4) Check nameplate. (5) Correct rotation (see Operation 2). (6) Replace pump with high head pump. (7) Remove foreign matter. (8) Replace bearing.
Pump vibrates; excessive operating noise.	(1) Reverse rotation. (2) Pump clogged with foreign matter. (3) Piping resonates. (4) Strainer is closed too far.	(1) Correct rotation. (2) Disassemble and remove foreign matter. (3) Improve piping. (4) Open strainer.

NOTE: Barmesa Pumps assumes no responsibility for damage or injury due to disassembly in the field. Disassembly of the pumps or supplied accessories other than at Barmesa Pumps or its authorized service centers, automatically voids warranty.

barmesa pumps

BARMESA PUMPS
FACTORY WARRANTY

Barmesa Pumps warrants that products of our manufacture will be free of defects in material and workmanship under normal use and service for 18 months from date of manufacture or 12 months from installation date whichever occurs first. This warranty gives you specific legal rights, which vary from state to state.

This warranty is a limited warranty, and no warranty related claims of any nature whatsoever shall be made against Barmesa Pumps, until the ultimate consumer or his/her successor notifies us in writing of the defect and delivers the product and/or defective part(s) freight prepaid to our factory or nearest authorized service station as instructed by Barmesa Pumps. THERE SHALL BE NO FURTHER LIABILITY, WHETHER BASED ON WARRANTY, NEGLIGENCE OR OTHERWISE. PRODUCT SHALL BE EITHER REPLACED OR REPAIRED AT THE ELECTION OF BARMESA PUMPS. Guarantees relating to performance specifications provided in addition to the foregoing material and workmanship warranties on a product manufactured by Barmesa Pumps, if any, are subject to possible factory testing. Any additional guarantees, in the nature of certified performance specifications or time frame must be in writing and such writing must be signed by our authorized factory manager at time of order placement and/or at time of quotation. Due to inaccuracies in field testing and should a conflict arises between the results of field testing conducted by or for the user, Barmesa Pumps reserves the right to have the product returned to our factory for additional testing.

This warranty shall not apply when damage is caused by (1) improper installation, (2) improper voltage, (3) lightning, (4) excessive sand or other abrasive material, (5) corrosion build-up due to excessive chemical content or (6) uncontrollable acts of god. Any modification of the original equipment will also void the warranty. We will not be responsible for loss, damage or labor cost due to interruption of service caused by defective pumps, parts or systems. Barmesa Pumps will not accept charges incurred by others without our prior written approval.

This warranty is void if our inspection reveals the product was used in a manner inconsistent with normal industry practice and/or our specific recommendations. The purchaser is responsible for communication of all necessary information regarding the application and use of the product. UNDER NO CIRCUMSTANCES WILL WE BE RESPONSIBLE FOR ANY OTHER DIRECT OR CONSEQUENTIAL DAMAGES, INCLUDING BUT NOT LIMITED TO TRAVEL EXPENSES, CONTRACTOR FEES, UNAUTHORIZED REPAIR SHOP EXPENSES, LOST PROFITS, LOST INCOME, LABOR CHARGES, DELAYS IN PRODUCTION, IDLE PRODUCTION, WHICH DAMAGES ARE CAUSED BY ANY DEFECTS IN MATERIAL AND/OR WORKMANSHIP AND/OR DAMAGE OR DELAYS IN SHIPMENT. THIS WARRANTY IS EXPRESSLY IN LIEU OF ANY OTHER EXPRESS OR IMPLIED WARRANTY. No rights extended under this warranty shall be assigned to any other person, whether by operation of law or otherwise, without our prior written approval.

IMPORTANT!
If you have a claim under the provision of the warranty, contact Barmesa Pumps or your authorized Barmesa Pumps Distributor:
warranty@barmesapumps.com
www.barmesapumps.com/US

Barmesa®
Pumps