Barmesa Pumps

Installation, Operation & Maintenance Manual

Submersible Solids Handling Pumps

2BSE-SS & 3BSE-SS series

0.5, 0.75 & 1 HP @ 1750 RPM

barmesapumps

2BSE51SS
0.5 HP

2BSE72SS
2BSE73SS
2BSE74SS
0.75 HP

3BSE102SS
3BSE103SS
3BSE104SS
1 HP

IMPORTANT! - Read all instructions in this manual before operating or servicing a pump.

Last update: AUG/10/2026

Before installation, read the following instructions carefully. Failure to follow instruction and safety information could cause serious bodily injury, death and/or property damage. Each Barmesa product is carefully inspected to insure proper performance. Closely following these instructions will eliminate potential operating problems, assuring years of trouble-free service.

⚠ DANGER **"Danger" indicates an imminently hazardous situation which, if not avoided, WILL result in death or serious injury.**

⚠ WARNING **"Warning" indicates an imminenty hazardous situation which, if not avoided, MAY result in death or serious injury.**

⚠ CAUTION **"Caution" indicates a potentially hazardous situation which, if not avoided, MAY result in minor or moderate injury.**

IMPORTANT! - Barmesa Pumps is not responsible for losses, injury or death resulting from failure to observe these safety precautions, misuse, abuse or misapplication of pumps or equipment.

ALL RETURNED PRODUCTS MUST BE CLEANED, SANITIZED, OR DECONTAMINATED PRIOR TO SHIPMENT, TO INSURE EMPLOYEES WILL NOT BE EXPOSED TO HEALTH HAZARDS IN HANDLING SAID MATERIAL. ALL APPLICABLE LAWS AND REGULATIONS SHALL APPLY.

⚠ WARNING Installation, wiring, and junction connections must be in accordance with the National Electric Code and all applicable state and local codes. Requirements may vary depending on usage and location.

⚠ WARNING Installation and servicing is to be conducted by qualified personnel only.

Keep clear of suction and discharge openings. Do not insert fingers in pump with power connected; the rotating cutter and/or impeller can cause serious injury.

Always wear eye protection when working on pumps. Do not wear loose clothing that may become entangled in moving parts.

⚠ DANGER

Pumps build up heat and pressure during operation. Allow time for pumps to cool before handling or servicing the pump or any accessory items associated with or near the pump.

⚠ DANGER

This pump is not intended for use in swimming pools or water installations where there is human contact with pumped fluid.

⚠ DANGER

Risk of electric shock. To reduce risk of electric shock, always disconnect pump from power source before handling any aspect of the pumping system. ***Lock out power and tag.***

⚠ WARNING **Do not** use these pumps in water over 104º F. **Do not** exceed manufacturers recommended maximum performance, as this could cause the motor to overheat.

⚠ DANGER

Do not lift, carry or hang pump by the electrical cables. Damage to the electrical cables can cause shock, burns or death. **Never** handle connected power cords with wet hands. Use appropriate lifting device.

⚠ WARNING Ground Fault Circuit Interrupter (GFCI) to be used with plug-in type power cord.

⚠ WARNING Sump and sewage pumps often handle materials which could cause illness or disease. Wear adequate protective clothing when working on a used pump or piping. Never enter a basin after it has been used.

⚠ DANGER

Failure to permanently ground the pump, motor and controls before connecting to power can cause shock, burns or death.

⚠ DANGER

These pumps are not to be installed in locations classified as hazardous in accordance with the National Electric Code, ANSI/NFPA 70.

⚠ WARNING The Uniform Plumbing Code (UPC) states that sewage systems shall have an audio and visual alarm that signals a malfunction of the systems, that are required to reduce the potencial for property damage.

IMPORTANT! - Prior to installation, record Model Number, Serial, Amps, Voltage, Phase and HP from pump name plate for the future reference. Also record the Voltage and Current Readings at Startup:

1 Phase Models	
Amps:	Volts:
3 Phase Models	
Amps L1-2:	Volts L1-2:
Amps L2-3:	Volts L2-3:
Amps L3-1:	Volts L3-1:

Model Number: _____

Serial: _____

PHASE: _____ HP: _____

DISCHARGE: 2" or 3" NPT female, vertical, bolt on flange.

SPHERICAL SLD HNDLG: 2"

LIQUID TEMPERATURE: 104 °F (40 °C) max.

VOLUTE: Cast iron ASTM A-48 class 30

MOTOR HOUSING: Cast iron ASTM A-48 class 30

SEAL PLATE: Cast iron ASTM A-48 class 30

IMPELLER: 2 vane, open, with vanes on back side. Cast iron ASTM A-48 class 30.

SHAFT: 416 series stainless steel

HARDWARE: 300 series stainless steel

SQUARE RINGS: Buna-N

PAINT: Air dry enamel, water based.

SEAL: Inboard, single mechanical, oil filled chamber. Silicon carbide, Buna-N elastomer and stainless steel hardware.

CORD ENTRY: 30 ft of neoprene cord SJO 14/3 , sealed against moisture.

UPPER BEARING: Ball, single row, oil lubricated, for radial load.

LOWER BEARING: Ball, single row, oil lubricated, for radial and thrust load.

MOTOR: ***Single phase:*** NEMA L, permanent split capacitor, oil filled, with overload protection in motor.

Three phase: NEMA B, oil filled. Requires overload protection to be included in control panel.

MODEL	PART No.	HP	VOLTS	PHASE	RPM (Nominal)	MAX AMPS	LOCKED ROTOR AMPS	NEMA CODE	CORD SIZE	CORD TYPE	CORD O.D.	WEIGHT (pounds)
2BSE51SS	62180501	0.5	115	1	1750	11.6	18.4	D	14/3	SJO	0.5"	91
2BSE51A	62180501A	0.5	115	1	1750	11.6	18.4	D	14/4	SJO	0.5"	93
2BSE52SS	62180502	0.5	200/230	1	1750	5.9	14.9	B	14/3	SJO	0.5"	93
2BSE53SS	62180503	0.5	200/230	3	1750	4.6/4.2	9.7/11.1	K	14/3	SJO	0.5"	95
2BSE54SS	62180504	0.5	460	3	1750	2.2	5.3	K	14/3	SJO	0.5"	95
2BSE72SS	62180505	0.75	230	1	1750	10.5	17.5	D	14/3	SJO	0.5"	95
2BSE73SS	62180506	0.75	200/230	3	1750	5.5	16	D	12/4	SJO	0.625"	96
2BSE74SS	62180507	0.75	460	3	1750	2.2	8	D	12/4	SJO	0.625"	96
3BSE102SS*	62180508	1	230	1	1750	8.3	17.5	A	14/3	SJO	0.69"	84
3BSE103SS*	62180509	1	200/230	3	1750	4.9	16	B	14/4	SO	0.75"	82
3BSE104SS*	62180510	1	460	3	1750	2.4	8	B	14/4	SO	0.75"	82

- 3" discharge flange is available for these models, (this change the model to 3BSE-SS).
* 2" discharge flange is available for these models, (this change the model to 2BSE-SS).

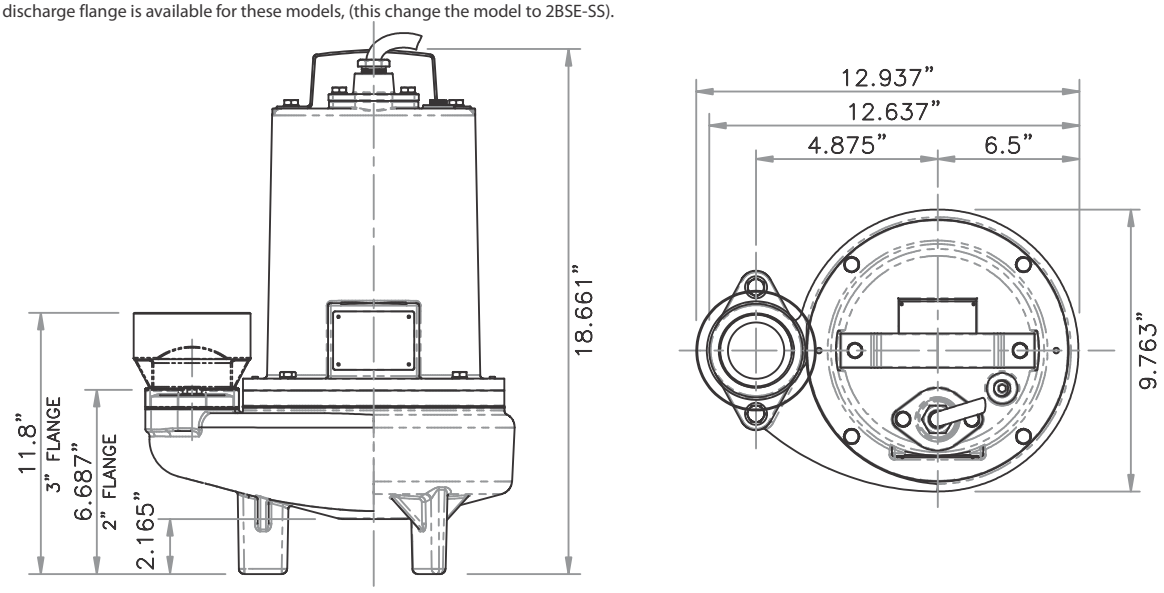

Receiving inspection
Upon receiving the pump, it should be inspected for damage or shortages. If damage has occurred, file a claim immediately with the company that delivered the pump. If the manual is removed from the packaging, do not lose or misplace.

Storage
Any product that is stored for a period longer than six (6) months from the date of purchase should be bench tested prior to installation. A bench test consists of, checking the impeller to assure it is free turning and a run test to assure the motor (and switch if provided) operate properly.

Controls
Manual models require a separate approved pump control device or panel for automatic operation. Be sure the electrical specification of the control selected properly match the electrical specifications of the pump.

Submergence
The pump should always be operated in the submerged condition. The minimum sump liquid level should never be less than above the pump's volute (See Figure 1).

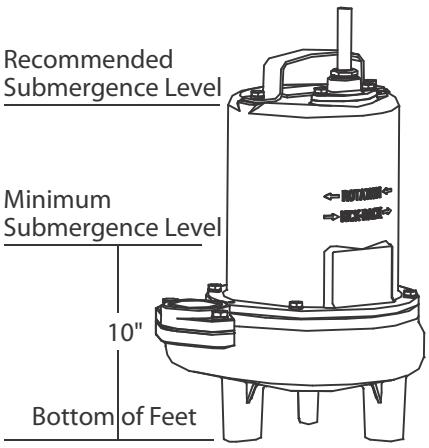

Figure 1

Installation
These pumps are recommended for use in a sump, basin or lift station. The sump, basin or lift station shall be sealed and vented in accordance with local plumbing codes. **This pump is designed to pump sewage, effluent or wastewater, non-explosive and non-corrosive liquids and shall NOT be installed in locations classified as hazardous in accordance with the National Electrical Code (NEC) ANSI/NFPA 70 or Canadian Electric Code (CEC).** The pump should never be installed in a trench, ditch, or hole with a dirt bottom. The legs will sink into the dirt and the suction will become plugged.

The installation should be at a sufficient depth to ensure that all plumbing is below the frost line. If this is not feasible, remove the check valve and size the basin to accommodate the additional backflow volume.

Pumps are most commonly installed in simplex or duplex stations or basins with a slide rail system (Barmesa SRC), which allows the pump(s) to be installed or removed without requiring personnel to enter the station, or resting on the basin floor.

Discharge Piping
Discharge piping should be as short as possible and sized no smaller than the pump discharge. **Do not reduce the discharge pipe size below that which is provided on the pump.** Both a check valve and a shut-off valve are recommended for each pump. The check valve is used to prevent backflow into the sump. The shut-off valve is used to manually stop system low during pump servicing.

Liquid Level Controls
The level control(s) should be mounted on the discharge piping, a cable rack or float pole. The level control should have adequate clearance so it cannot hang up in it's swing and that the pump is completely submerged when the level control is in the "Off" mode. The minimum tether is 3.50". By adjusting the cord tether the control level can be changed. One cycle of operation should be observed, so that any potential problems can be corrected.

It is recommended that the level control float should be set to insure that the liquid in the sump never drops below the top of the motor housing or a minimum level of 10 inches above the basin floor.

Electrical Connections
Power cable:
The power cable mounted to the pump must not be modified in any way except for shortening to a specific application. Any splice between the pump and the control panel must be made in accordance with the electric codes. It is recommended that a junction box, if used, be mounted outside the sump or be of at a minimum Nema 4 construction if located within the wet well. **DO NOT USE THE POWER CABLE TO LIFT PUMP.**

Always rely upon a Certified Electrician for installation.

Overload Protection:
Single Phase - The stator in-winding overload protector used is referred to as an inherent overheating protector and operates on the combined effect of temperature and current. This means that the overload protector will trip out and shut the pump off if the windings become too hot, or the load current passing through them becomes too high.

Barmesa pumps

IMPORTANT! - The overload will then automatically reset and start the pump up after the motor cools to a safe temperature. In the event of an overload, the source of this condition should be determined and corrected immediately.

⚠ WARNING DO NOT ALLOW THE PUMP TO CYCLE OR RUN IF AN OVERLOAD CONDITION OCCURS.

If current through the temperature sensor exceeds the values listed, an intermediate control circuit relay must be used to reduce the current or the sensor will not work properly.

Temperature sensor electrical ratings		
Volts	Continuous amps	Starting amps
110 - 120	3	30
220 - 240	1.5	15
440 - 480	0.75	7.5
600	0.6	6

Wire Size:
If longer power cable is required consult a qualified electrician for proper wire size.

Pre-Operation

1. **Check Voltage and Phase -** Compare the voltage and phase information stamped on the pump name plate.

2. **Check Pump Rotation -** Improper motor rotation can result in poor pump performance and can damage the motor and/or pump. Check rotation on three phase units by momentarily applying power and observe the "kickback".

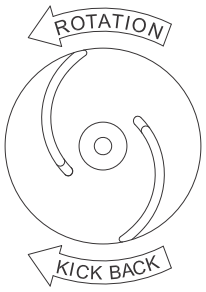

Bottom of Pump

Kickback should always be in a counter-clockwise direction as viewed from motor end or opposite to impeller rotation. Impeller rotation is counter-clockwise as viewed from bottom of pump.

3. **Name Plate -** Record the information from the pump name plate to drawing in front of manual for future reference.

4. **Insulation Test -** An insulation (megger) test should be performed on the motor. Before the pump is put into service. The resistance values (ohms) as well as the voltage (volts) and current (amps) should be recorded.

5. **Pump-Down Test -** Be sure pump has been properly wired, lowered into the basin, sump or lift station, check the system by filling with liquid and allowing the pump to operate through its pumping cycle. The time needed to empty the system, or pump-down time along with the volume of water, should be recorded.

Maintenance

No lubrication or maintenance is required. Perform the following checks when pump is removed from operation or when pump performance deteriorates:

a) Inspect motor chamber for oil level and contamination.
b) Inspect impeller and body for excessive build-up or clogging.
c) Inspect motor, bearings and shaft seal for wear or leakage.

Servicing

NOTE: Item numbers in ( ) refer to Figure 4.

Cooling Oil - Anytime the pump is removed from operation, the cooling oil in the motor housing should be checked visually for oil level and contamination. To check oil, set unit upright. Remove pipe plug (34) from housing (3). With a flashlight, visually inspect the oil in the housing (3) to make sure it is clean and clear, light amber in color and free from suspended particles. Milky white oil indicates the presence of water. Oil level should be just above the motor when pump is in vertical position.

Oil Testing

- Drain oil into a clean, dry container by placing pump on it's side, remove pipe plug (34), from housing (3).
- Check oil for contamination using an oil tester with a range to 30 kilovolts breakdown.
- If oil is found to be clean and uncontaminated (measuring above 15 kV breakdown), refill the housing.
- If oil is found to be dirty or contaminated (or measures below 15 kV breakdown), the pump must be carefully inspected for leaks at the shaft seal, cable assembly, square ring and pipe plug, before refilling with oil. To locate the leak, perform a pressure test.

After leak is repaired, dispose of old oil properly, and refill with new oil.

barmesapumps

Pressure Test (If oil has been drained) - Remove pipe plug (34) from housing (3). Apply pipe sealant to pressure gauge assembly and tighten into hole. Pressurize motor housing to 10 PSI. Use soap solution around the sealed areas and inspect joints for "air bubbles".

If, after five minutes, the pressure is still holding constant, and no "bubbles" are observed, slowly bleed the pressure and remove the gauge assembly. Replace oil. Leek must be located and repaired if pressure does not hold.

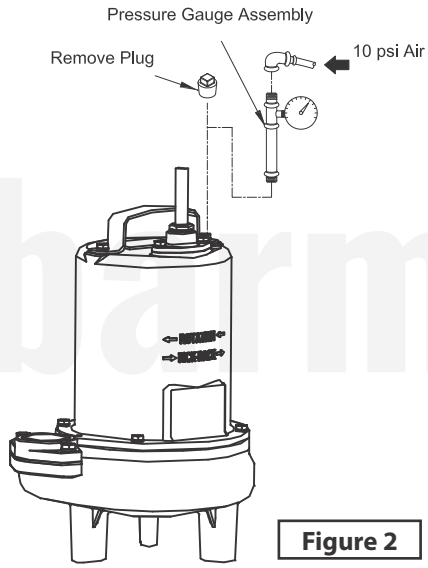

Figure 2

Pressure Test (If oil has NOT been drained) - Oil should be at normal level. Remove pipe plug (34) from housing (3). Apply pipe sealant to pressure gauge assembly and tighten into hole. Pressurize motor housing to 10 PSI. Use soap solution around the sealed areas above the oil level and inspect joints for "air bubbles". For sealed areas below oil level, leeks will seep oil. If, after five minutes, the pressure is still holding constant, and no "bubbles", oil seepage is observed, slowly bleed the pressure and remove the gauge assembly. Replace oil. Leek must be located and repaired if pressure does not hold.

Pressure builds up extremely fast, increase pressure by "TAPPING" air nozzle. Too much pressure will damage seal. ***DO NOT exceed 10 PSI.***

Oil Replacement - Set unit upright and refill with new cooling oil as per table below. Fill to just above motor, but below capacitor as an air space must remain in the top of the housing to compensate for oil expansion. Apply pipe thread compound to threads of pipe plug (34) then assemble to housing (3).

DO NOT *overfill oil. Overfilling of housing with oil can create excessive and dangerous hydraulic pressure which can destroy the pump and create a hazard.*
Overfilling oil voids warranty.

Cooling oil Recommended supplier / Grade	
BP	Enerpar SE100
Conoco	Pale Parafin 22
Mobile	D.T.E. Oil Light
Shell Canada	Transformer-10
Texaco	Diala-Oil-AX

▸ Disassembly

Impeller and Volute:

1. Disconnect power.

2. Remove capscrews and washers (13), vertically lift motor housing and seal plate assembly from volute (18). Clean out volute if necessary.

3. Inspect gasket (14) and replace if cut or damaged.

4. Clean and examine impeller (16), for cracks or breakage and replace if required. To remove impeller (16), remove impeller nut (17) with a wheel puller, pull impeller straight of shaft and remove key.

5. Remove v-gasket (23) and replace if damaged.

Motor and Capacitor:

6. Position unit upright using blocks or 4" piece of pvc pipe, to avoid resting unit on shaft.

7. Remove wire nut, friction rings and grommet from motor housing (3). Pull cord through and disconnect the wires from the terminals.

8. Disconnect all wires noting where each is connected. There is a number next to each pin for reference on the bottom of the block.

9. Remove screws (12) and lift motor housing (3) from seal plate (15).

10. Remove o-ring (2), replace if damaged.

11. Remove motor bolts, lift motor stator assembly from seal plate (15).

12. On Single Phase units only. Check motor capacitor (4) with an Ohm meter by first grounding the capacitor by placing a screwdriver across both terminals and then removing screwdriver. Connect Ohm meter (set on high scale) to terminals. If needle moves to infinity (∞) then drifts back, the capacitor is good. If needle does not move or moves to infinity (∞) and does not drift back, replace capacitor (4).

13. Inspect motor winding for shorts and check resistance values. Check rotor for wear. If rotor or the stator windings are defective, the complete motor must be replaced.

barnes pumps

Shaft Seal:
14. Lift motor rotor, shaft, bearing (6), rotating member of seal, washer (7) from seal plate (15). See Figure 3.

15. Remove seal parts from shaft. Examine all seal parts, if seal faces show signs of wear, uneven wear pattern, chips or scratches replace entire seal. **DO NOT interchange seal components, replace the entire shaft seal (24)**. If replacing seal, remove stationary from seal plate (15) by prying out with flat screwdriver.

Reassembly

IMPORTANT! - All parts must be clean before reassembly. Handle seal parts with extreme care. DO NOT damage lapped surfaces.

Shaft Seal:
1. To reassemble, clean seal cavity in seal plate (15) and oil.

2. Press seal's stationary member firmly into seal plate (15), use a seal tool or pipe. Nothing should come in contact with the seal face except the seal tool. Be sure the stationary is in straight.

3. Press lower bearing (6) onto shaft.

4. Place seal's (24) retaining ring and spring onto shaft. Lightly oil **(Do not use grease)** shaft and inner surface of bellows.

5. With lapped surface of rotating member facing outward, slide over shaft using a seal tool, being carefull not to damage seal face. Make sure spring is seated in retaining ring and spring is lined up on rotating member and not cocked or resting on bellows tail.

Bearing and Motor:
6. Slide rotor/shaft with bearing (6) and seal parts (24) into seal plate (15) until bearing seats into seal plate. Place stator over rotor, lining up motor bolts with holes in seal plate (15). Insert motor bolts and torque to 17 inch pounds.

7. Lubricate and place square ring (14) into bore on seal plate (15).

8. On Single phase units, connect capacitor (4) to motor wires. See Figure 5. Install ground wire on end bell if removed. Place fiberglass sleeve over motor and ground leads if removed. Pull wires through opening in top of motor housing while lowering motor housing onto seal plate (15).

9. Place socket head screws (31) through seal plate into motor housing and torque to 60 inch pounds.

Impeller and Volute:
10. Install v-gasket (23) and impeller washer (17) over shaft, and into seal plate (15).

11. Install impeller (16) by cleaning the threads with thread locking compound cleaner. Apply removable Loctite® 609 or equivalent to shaft threads. Screw impeller onto shaft hand tight while using a screwdriver in the slot at the end of the shaft to hold it stationary. Rotate impeller to check for binding.

12. Place gasket (19) onto volute (18).

13. Lower motor housing and seal plate assembly onto volute (18). Apply thread locking compound to capscrews and with washers place through motor housing, into volute and torque to 11 ft. lbs.

Cable Assembly:
14. Check power cord (1) for cracks or damage and replace if required. Insert one friction ring, grommet, one friction ring, and gland nut into motor housing (3) or conduit box and cable assembly (1) and torque wire nut to 15 ft. lbs.

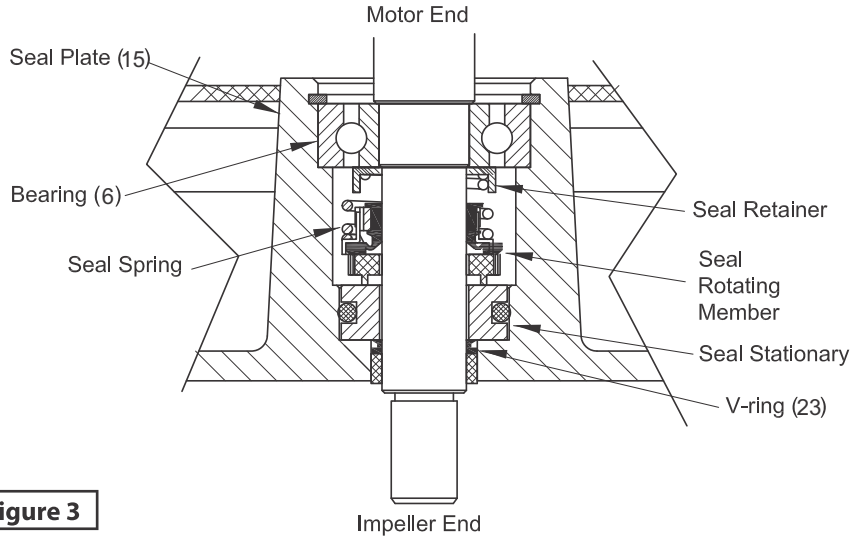

Figure 3

SINGLE-PHASE 115/230V AC
POWER CORD 3x14

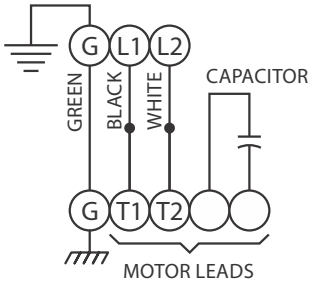

Single phase 115 - 230 VAC	
Cable	# motor line
Green	Green
Black	1
White	2
Female terminal	Capacitor
Male terminal	Capacitor

THREE-PHASE 208/230V AC
POWER CORD 4x12

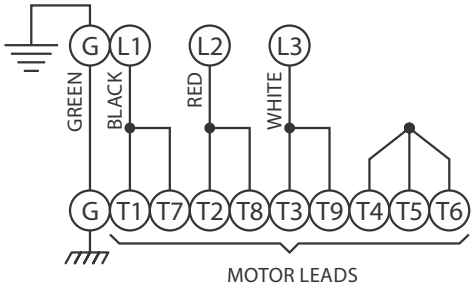

Three phase, 230 VAC	
Cable	# motor line
Green	Green
Black	1 & 7
Red	2 & 8
White	3 & 9
	4, 5 & 6 together

THREE-PHASE 460V AC
POWER CORD 4x12

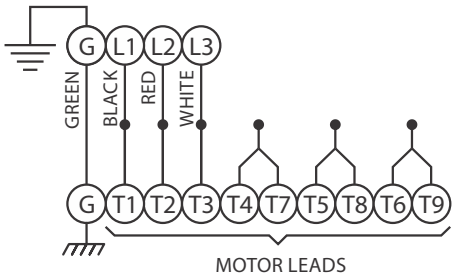

Three phase, 460 VAC	
Cable	# motor line
Green	Green
Black	1
Red	2
White	3
	4 & 7 together
	5 & 8 together
	6 & 9 together

barmesapumps

Figure 4

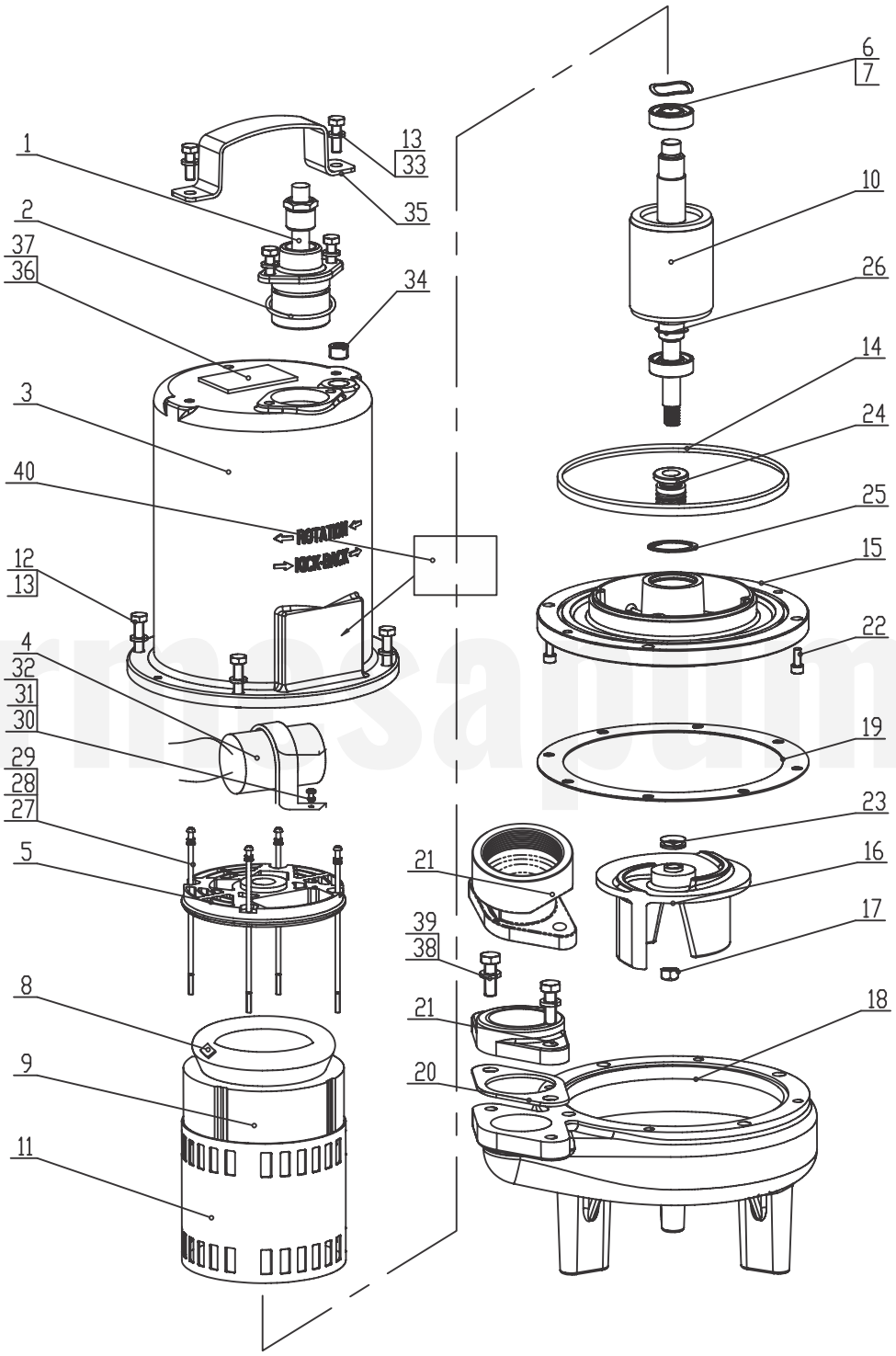

For Repair Part Please supply: Model Number and Serial as shown on Name Plate, and Part Description and Part Number as shown on Parts List.

barnesapumps

ITEM	DESCRIPTION	QTY.	MATERIAL
1	CABLE ASSEMBLY (14AWG-3) - Single phase	1	SOW
1	CABLE ASSEMBLY (14AWG-4) - Three phase	1	SOW
2	O-RING Ø45 x 3.1	1	NBR 40
3	PUMP BODY	1	HT200
4	CAPACITOR 30μ F/300V 90°C	1	ALUMINIUM
5	UPPER BEARING PLATE	1	ZL102
6	BEARING 6203	2	-
7	WAVE WASHER	39	65Mn
8	TEMPERATURE PROTECTOR	1	-
9	STATOR	1	-
10	ROTOR COMPONENT	1	-
11	STATOR COMPONENT	1	-
12	HEX. HEAD BOLT 5/16"-18UNC x 4"	4	SS 304
13	SPRING WASHER	8	SS 304
14	LOWER BEARING PLATE O-RING Ø192 x Ø199 x 35	1	NBR 40
15	LOWER BEARING PLATE	1	HT200
16	IMPELLER Ø131.5	1	HT200
17	THIN NUT 1/2"-20 UNF	1	2Cr13
18	CASING	1	HT200
19	CASING SEALING WASHER	1	RUBBER
20	DISCHARGE SEALING WASHER	1	NBR 40
21	2" DISHARGE	1	HT200
22	HEX. SOCKET CAP SCREWS 1/4"-20UNC x 28	2	SS 304
23	"V" SHAPE RING	1	NBR 40
24	MECHANICAL SEAL Ø31.8 x Ø15.9 x 32.5	1	SiC/SiC
25	ELLASTIC COLLAR 40	1	65Mn
26	ELLASTIC COLLAR 17	1	65Mn
27	LENGTHEN BOLT #8-32 x 140	4	Q235A
28	FLAT WASHER 4	4	Q235A
29	SPRING WASHER 4	4	65Mn
30	CAPACITOR CLAMP	1	08F
31	CROSS RECESSED PAN HEAD SCREW M4 x 8	2	Q235A
32	GROUND LEAD	1	-
33	HEX. BOLT 5/16"-18UNC x 25	4	SS 304
34	HEX. SOCKET PIPE PLUG 3/8"-18 NPT	1	SS 304
35	HANDLE	1	SS 304
36	NAME PLATE	1	SS 304
37	NAIL FOR NAME PLATE Ø2 x 4	4	Cu
38	HEX. HEAD BOLT 3/8"-16UNC x 22	2	SS 304
39	SPRING WASHER 10	2	SS 304
40	TRADEMARK SIGN	1	SS 304

barrelspumps

For Repair Part Please supply: Model Number and Serial as shown on Name Plate, and Part Description and Part Number as shown on Parts List.

Risk of electric shock. Always disconnect the pump from the power source before handling inspections or repairs.

SYMPTOM	POSSIBLE CAUSE		CORRECTIVE ACTION
A) Pump will not run.	Poor electrical connection, blown fuse, tripped breaker or other interruption of power; improper power supply.	**(1)**	**(1)** Check all electrical connections for security. Have electrician measure current in motor leads, if current is within ± 20% of locked rotor Amps, impeller is probably locked. If current is 0, overload may be tripped. Remove power, allow pump to cool, then re-check current. **(2)** Reposition pump or clean basin as required to provide adaquate clearance for float. **(3)** Disconnect level control. Set ohmmeter for a low rang, such as 100 ohms full scale and connect to level control leads. Actuate level control manually and check to see that ohmmeter shows zero ohms for closed switch and full scale for open switch. (Float Switch) **(4)** Replace according to the manual. **(5)** Make sure liquid level is above the pump. **(6)** Re-check all sizing calculations to determine proper pump size. **(7)** Check discharge line for restrictions, verifying proper operation of valves, including ice if line passes through or into cold areas. **(8)** Remove and examine check valve and verify that operates well.
	Motor or switch inoperative.	**(2)**	
	Float movement restricted.	**(3)**	
	Switch will not activate pump of is defective.	**(4)**	
	Defective motor.	**(5)**	
	Insufficient liquid level.	**(6)**	
B) Pump will not turn off.	Float movement restricted.	**(2)**	
	Switch will not activate pump or is defective.	**(3)**	
	Ecessive inflow or pump not properly seized for application.	**(6)**	
	Pump may be air locked causing pump not to flow.	**(11)**	
	The switch is in manual position.	**(16)**	
C) Pump hums but dosen´t run.	Incorrect low voltage.	**(1)**	
	The impeller is jammed or the shaft is loose, worn or damaged, or inlet plugged.	**(10)**	

barmesapumps

NOTE: Barmesa Pumps assumes no responsibility for damage or injury due to disassembly in the field. Disassembly of the pumps or supplied accessories other than at Barmesa Pumps or its authorized service centers, automatically voids warranty.

SYMPTOM	POSSIBLE CAUSE		CORRECTIVE ACTION
D) Pump delivers insufficient capacity.	Incorrect low voltage.	**(1)**	**(9)** Open the valve.
	Discharge restricted.	**(7)**	
	Check valve is partially closed or installed backward.	**(8)**	**(10)** Check the impeller so that it rotates freely. Clean the cavity of the impeller and the suction of the pump body by removing any obstructions.
	Shut-off valve closed.	**(9)**	
	The impeller is jammed or the shaft is loose, worn or damaged, or inlet plugged.	**(10)**	**(11)** Loosen union slightly to allow trapped air to escape. Verify that turn-off level of switch is set so that the suction is always flooded. Clean vent hole.
	Pump may be air locked casuing pump not to flow.	**(11)**	**(12)** Check rotation. If power supply is three phase, reverse any two of three power supply leads to ensure proper impeller rotation.
	Pumprunning backwards.	**(12)**	**(13)** Repair fixtures as required to eliminate leakage.
E) The pump turns on and off very frequently (more than usual).	Check valve is partially closed or installed backward.	**(8)**	**(14)** Check the temperature of the liquid to be pumped, which must not exceed 160 ° F (71 ° C).
	fixtures are leaking.	**(13)**	**(15)** Replace portion of discharge pipe with flexible connector or tighten existing piping..
	Groundwater is entering basin.	**(17)**	**(16)** Turn to automatic position.
F) The pump goes off and on regardless of the switch and activates the thermal overload protector . **CAUTION!**, the pump may start unexpectedly. Disconnect power supply.	Wiring or electrical current is inappropriate.	**(1)**	**(17)** Check for leaks around basin inlet and outlets.
	The total dynamic charge is below the recommended minimum.	**(6)**	
	Impeller is jammed or bounds near the pump body.	**(10)**	
	Excessive water temperature (internal protection only).	**(14)**	
G) Pump operates noisily or vibrates excessively.	Worn bearings, the motor shaft bent.	**(4)**	
	Obstruction in the cavity of the impeller or is impaired.	**(10)**	
	Impeller rotation is incorrect.	**(12)**	
	Piping attachments to build dtructure too loose or rigid.	**(15)**	

barmesapumps

NOTE: Barmesa Pumps assumes no responsibility for damage or injury due to disassembly in the field. Disassembly of the pumps or supplied accessories other than at Barmesa Pumps or its authorized service centers, automatically voids warranty.

BARMESA PUMPS
FACTORY WARRANTY

Barmesa Pumps warrants that products of our manufacture will be free of defects in material and workmanship under normal use and service for 18 months from date of manufacture or 12 months from installation date whichever occurs first. This warranty gives you specific legal rights, which vary from state to state.

This warranty is a limited warranty, and no warranty related claims of any nature whatsoever shall be made against Barmesa Pumps, until the ultimate consumer or his/her successor notifies us in writing of the defect and delivers the product and/or defective part(s) freight prepaid to our factory or nearest authorized service station as instructed by Barmesa Pumps. THERE SHALL BE NO FURTHER LIABILITY, WHETHER BASED ON WARRANTY, NEGLIGENCE OR OTHERWISE. PRODUCT SHALL BE EITHER REPLACED OR REPAIRED AT THE ELECTION OF BARMESA PUMPS. Guarantees relating to performance specifications provided in addition to the foregoing material and workmanship warranties on a product manufactured by Barmesa Pumps, if any, are subject to possible factory testing. Any additional guarantees, in the nature of certified performance specifications or time frame must be in writing and such writing must be signed by our authorized factory manager at time of order placement and/or at time of quotation. Due to inaccuracies in field testing and should a conflict arises between the results of field testing conducted by or for the user, Barmesa Pumps reserves the right to have the product returned to our factory for additional testing.

This warranty shall not apply when damage is caused by (1) improper installation, (2) improper voltage, (3) lightning, (4) excessive sand or other abrasive material, (5) corrosion build-up due to excessive chemical content or (6) uncontrollable acts of god. Any modification of the original equipment will also void the warranty. We will not be responsible for loss, damage or labor cost due to interruption of service caused by defective pumps, parts or systems. Barmesa Pumps will not accept charges incurred by others without our prior written approval.

This warranty is void if our inspection reveals the product was used in a manner inconsistent with normal industry practice and/or our specific recommendations. The purchaser is responsible for communication of all necessary information regarding the application and use of the product. UNDER NO CIRCUMSTANCES WILL WE BE RESPONSIBLE FOR ANY OTHER DIRECT OR CONSEQUENTIAL DAMAGES, INCLUDING BUT NOT LIMITED TO TRAVEL EXPENSES, CONTRACTOR FEES, UNAUTHORIZED REPAIR SHOP EXPENSES, LOST PROFITS, LOST INCOME, LABOR CHARGES, DELAYS IN PRODUCTION, IDLE PRODUCTION, WHICH DAMAGES ARE CAUSED BY ANY DEFECTS IN MATERIAL AND/OR WORKMANSHIP AND/OR DAMAGE OR DELAYS IN SHIPMENT. THIS WARRANTY IS EXPRESSLY IN LIEU OF ANY OTHER EXPRESS OR IMPLIED WARRANTY. No rights extended under this warranty shall be assigned to any other person, whether by operation of law or otherwise, without our prior written approval.

IMPORTANT!
If you have a claim under the provision of the warranty, contact Barmesa Pumps or your authorized Barmesa Pumps Distributor:
warranty@barmesapumps.com
barmesapumps.com/US

Barmesa®
Pumps